THE VALIDATION OF A MAINTAINABILITY PREDICTION TECHNIQUE FOR AN AIRBORNE ELECTRONIC SYSTEM

B. L. RETTERER
G. H. GRISWOLD
R. L. McLAUGHLIN
DONALD A. TOPMILLER, PhD

FOREWORD

This study was initiated by the Human Engineering Division of the Aerospace Medical Research Laboratories (AMRL), Aerospace Medical Division, Wright-Patterson Air Force Base, Ohio. The research was conducted by the Radio Corporation of America, Camden, New Jersey, under Contract No. AF33(615)-1338. Mr. Grafton H. Griswold was the principal investigator; Donald A. Topmiller, PhD., of the Maintenance Design Branch, Human Engineering Division, was the contract monitor. The work was performed in support of Project No. 7184, "Human Performance in Advanced Systems," and Task No. 718406, "The Development of Human Engineering Maintainability Design Criteria." The research sponsored by this contract was started in January 1964, and was completed in September 1964.

The maintainability prediction technique, subject of this study, was developed for the Rome Air Development Center, Research and Technology Division, (RTD), Griffiss Air Force Base, New York, under Contract AF30(602)-2057.

The authors acknowledge the assistance of Lt. Col. J. L. Maybell of RTD for technical support provided in the performance of this study. Mr. T. Harris of the Aeronautical Systems Division (ASD) rendered valuable assistance by providing technical information pertinent to the AN/APX-46 IFF equipment.

Special recognition is also due to the following individuals who constituted the AMRL/ASD/RTD research team: Mr. N. M. Aume, AMRL; Mr. L. R. Bridge, RTD; Mr. G. P. Chubb, AMRL; Mr. W. H. Skirvin, RTD.

This technical report has been reviewed and is approved.

WALTER F. GRETHER, PhD
Technical Director
Behavioral Sciences Laboratory

ABSTRACT

A technique for predicting the maintainability, at the field maintenance level, of airborne electronic equipment was investigated. In the technique, which was based on one previously developed for ground electronic systems, design features, skill requirements, facilities and the maintenance environment are used to predict maintenance times.

Predictions of elemental task-times involved in maintaining the AN/APX-46 airborne IFF were computed from ratings made independently by Air Force and contractor (RCA) personnel. These predictions were compared with each other and with data collected under field conditions in which malfunctions were artificially introduced.

The two independent predictions of overall down time were in close agreement with each other, however, there was little agreement between the elemental task-time predictions. Although the field-condition data were limited, the analyses suggest that the prediction equation would tend to overestimate actual times.

On the basis of this study it cannot be concluded that the technique, as used, accurately predicts maintenance down-time of airborne electronic equipment. However, it appears that portions of the technique could be used to evaluate the relative maintainability of alternative designs. Suggestions for modifying the techniques and for improving the predictions are presented.

TABLE OF CONTENTS

LIST OF ILLUSTRATIONS

LIST OF TABLES

SECTION I
INTRODUCTION

1.1 Purpose of Program

The maintainability of military equipment has a significant effect on the national defense posture and its associated costs. Equipment that is difficult to maintain places a burden on the available resources, and also may weaken the defense system through excessive downtime. To overcome this problem, equipment should be designed for ease of maintenance, and should retain this attribute during production, installation, and field use. The Air Force Maintainability Specification MIL M-26512 recognizes this need, and establishes requirements for maintainability prediction to be accomplished during design to assure that maintainability is achieved. Maintainability prediction provides a means of determining the expected operational maintenance requirements during design phases, thus affording an opportunity to institute corrective design action for deficiencies noted or to make intelligent tradeoffs with other cost considerations.

It was the objective of this program to evaluate a maintainability prediction technique recently developed for ground electronic equipment to determine if the technique is applicable to airborne equipment. Since maintenance procedures for airborne equipment differ for the organization (flight-line) and field maintenance, the study was directed to investigating the ability to predict maintenance time in the latter echelon.

1.2 Background

The maintainability prediction technique evaluated by this program was developed by RCA Service Company under sponsorship of the Rome Air Development Center (Refs. 1,2). Although the technique was designed expressly for ground electronic systems, it was felt that the underlying principles are sufficiently broad to permit a greater applicability.

Briefly, the technique is based on a mathematical relationship which equates maintenance time to measures of maintenance design configuration, including facilities and personnel skill requirements. These measures are obtained by rating the specific design features associated with a maintenance task. Inserting these ratings into the previously developed mathematical relationship permits the calculation of an estimated task time. Repeating this operation for a representative sample of maintenance tasks permits the expected mean-time-to-repair to be calculated. Since the rating considers only those features associated with the specific task being evaluated, it is possible to examine different maintenance levels. For example, in the field maintenance

situation, the equipment configuration would be of prime importance; whereas, at the organizational level, the aircraft interface would be considered.

The prediction technique has been validated for the ground system application. This was achieved by developing independent predictions for two ground systems and comparing the predicted values to actual observed data. On the basis of this success, the extension of the technique to the airborne application formed the next logical step. For this study, only the field maintenance level was investigated.

1.3 Summary of Contents

Section II of this report describes in detail the tasks accomplished in performance of this study. These tasks include (1) technique adaption, (2) prediction training, (3) maintainability prediction, (4) field evaluation, and (5) data analysis.

Section III presents the conclusions reached concerning the prediction technique validity and reliability as applied to airborne equipment field maintenance. Technical recommendations for application and improvement of the technique are noted in Section IV. Appendices containing detailed data supporting the prediction and analysis are provided.

SECTION II

THE STUDY PROGRAM

2.1 Summary of Approach

The demonstration of the validity of the prediction technique to the airborne maintenance situation was approached by the contractor's performing a prediction of a typical equipment, using only design information. The resulting prediction was then compared to criterion data obtained by observing actual maintenance performed on the selected equipment. A measure of prediction agreement was obtained by comparing the average maintenance time predicted by the contractor to the figure obtained independently by personnel of the Aerospace Medical Research Laboratories. Tasks performed to accomplish these investigations included (1) adaption of the technique to airborne environment, (2) training of AMRL personnel in the use of the prediction technique, (3) maintainability predictions for the study equipment, (4) field evaluation of the study equipment and, (5) analysis of data emanating from the study effort. Details concerning the accomplishment of these tasks and the results obtained are presented in the subsequent paragraphs.

2.2 Adaption of the Technique

It was the purpose of this task to review the prediction technique developed for ground electronic equipment in the context of the maintenance situation for airborne electronic equipment. The airborne field maintenance environment usually consists of a repair facility equipped with necessary test equipment and test harnesses to operate and completely check out the equipment. The equipment that is delivered to the facility for repairs has been previously checked out in the aircraft to determine that it has, or is suspected of having, a failure.

The field maintenance procedure for airborne equipment begins with the installation of the equipment into the test bench harness. This harness contains provisions for connecting test equipment into the system, and provides test points for input and output of each unit. Special test equipment may be supplied to augment standard types for the particular equipment being maintained. Maintenance is accomplished by performing a series of tests until the failed circuit board or part is found and replaced. If the equipment being repaired is modularized, the usual maintenance procedure is to first locate the faulty module and replace it with a good one, and then check out and align the equipment. The faulty module is then analyzed and repaired at some other time and returned to stock. This procedure provides decreased turn-around time for the prime equipment. Preventive

maintenance routines and re-alignments may be performed while the equipment is in the facility for repair. This procedure is in lieu of performing these tasks at regularly scheduled intervals.

Using the foregoing general description of the field maintenance environment for airborne electronic equipment, the three checklists and their scoring criteria, used by the prediction technique to evaluate the equipment design features, were reviewed. From this review several changes were made to the scoring criteria. The new criteria are considered to be less subjective, and contain examples to show the explicit meaning of each item. A matrix was also developed for the physical design checklist to show the relation of each checklist item to the various levels of equipment construction. The checklists and the revised scoring criteria, in association with the matrix, are contained in Appendix I.

2.3 Prediction Training

To test the agreement (reliability) of the prediction technique, it was established that a research team comprised of AMRL, RTD and ASD engineer/scientists would accomplish a prediction for the selected equipment, independent of that accomplished by the contractor. Since these personnel were not experienced in technique application, a two-week (approx. 40 hours) training program was provided. The personnel in attendance had varying backgrounds including mechanical engineering, electrical engineering, and psychological training and experience. Appendix II to this report contains the outline of the maintainability training program. This course consisted of an introduction to the maintainability technology, a description of the technique development, procedures for applying the technique, and practice sessions in the use of the technique.

2.4 Maintainability Prediction

2.4.1 General

Two predictions were performed, one by the contractor and one by AMRL, to provide data for determining the reliability and validity of the technique. This section describes the prediction effort and results obtained for both predictions.

The equipment selected for the validation vehicle was the AN/APX-46 IFF equipment. This equipment consists of a receiver-transmitter (R-T), and two control units. The receiver-transmitter is removed as a unit from the aircraft for field maintenance, so only this unit was evaluated for the purposes of this program. The R-T unit consists of nine removable modules and a

chassis. Each module contains either three circuit boards or a conventionally wired assembly. Selection of this equipment was predicated upon the equipments' being typical of the current state of the art within the airborne equipment inventory.

The use of the prediction technique to evaluate the maintainability of an equipment is approached from a sampling basis. A sample of representative tasks, for an equipment, is selected from the total tasks available. Scoring each of these tasks through the use of the design checklists is then accomplished. A downtime nomograph based on a previously developed equation permits the interpretation of each score in terms of time requirements. Collective treatment of these individual times permits calculation of maintenance indices for the equipment.

2.4.2 Sample Selection

The selection of a task sample for the maintainability prediction consists of three steps: determining sample size; determining the equipment failure distribution; and randomly selecting sample tasks in accordance with the failure distribution. The following paragraphs describe how each of these steps was accomplished for the AN/APX-46 IFF equipment.

The sample size is calculated by using the equation (Ref.3):

$$N = \left(\frac{\phi}{k} \frac{\sigma}{\bar{x}} \right)^2 \qquad (1)$$

where:

ϕ = Confidence level (measured in standard deviations)

$\sigma/\bar{x}$ = Population coefficient of variation

k = Accuracy (decimal fraction)

To compute the sample size for the APX-46, a confidence level of 90% ($\bar{x} \pm 1.645\sigma$) and an accuracy of $\pm$ 25% were selected. The coefficient of variation was estimated to be 0.91. (This value was obtained from a field evaluation of a similar equipment, the AN/GRR-7/GRT-3 communication system.) By substituting the above values in Equation 1, a required sample size of 36 was computed.

The failure distribution of the APX-46 was determined by counting the electronic parts in the equipment, and then multiplying the number of parts in each class by its average failure rate (Ref. 4) (Failure rates were obtained from the RADC Reliability Notebook.) The percent contribution of each part class

to the total failures was then calculated, and each percentage was multiplied by the sample size (36) to determine the necessary number of parts in each class. The results of these calculations for the APX-46 are illustrated in Table 1.

The actual parts to be used in the prediction sample were selected from the total parts in each class through the use of a table of random numbers. Where more than one failure mode was predominant for a part class, a random selection process was also used to determine the modes to be used with each part. In addition to the 36 part-failures, four representative adjustment malfunctions were added to the task sample. These adjustments were judged as being representative of circuit drift malfunctions that would occur in field operation. The tasks resulting from the above selection process are illustrated in Table 2.

2.4.3 Task Prediction

2.4.3.1 General Technique

To accomplish the task predictions, the evaluator should have available detailed information, including schematic diagrams and physical layouts. The evaluator must be thoroughly familiar with the functional operation of the equipment. Figure 1 illustrates a functional block diagram which was developed to assist the evaluator in performing a maintenance analysis of the AN/APX-46. Other information needed is a description of the tools and test equipment to be provided, and the maintenance aids to be incorporated in the prime equipment. A description of the operation and maintenance environment is also extremely valuable.

Prior to task scoring, it is necessary that, for each task, a maintenance analysis be performed. This analysis entails a step-by-step accounting of a logical diagnostic procedure. Beginning with the symptoms of malfunction, each step required in locating the defective part is recorded. Complementary to each step, notations regarding access problems, test equipment requirements, and related information which is important to determining the task scores, are made. Table 3 illustrates a format used for this analysis. The form is divided into two columns. The left column, labelled "Maintenance Steps" is used to record each test or step that a technician should make. Scoring comments associated with each step are entered in the column on the right. Completion of the maintenance analysis provides a firm basis for the scoring. The full scope of a maintenance situation is realized through this process.

The design prediction is accomplished by completing the three design-related checklists for sample tasks. Specifically,

TABLE 1

AN/APX-46 PART FAILURE DISTRIBUTION

(Not Including Test Module)

Part Class*	Complexity	Failure Rate (%/1000 Hrs.)	Expected Failures (Per 10^5 Hrs.)	Percent Contribution	Sample Of 36
C	298	0.010	2.980	6.90	2.48 (2)
CR	165	0.050	8.250	19.11	6.88 (7)
J	18	0.010	0.180	0.42	0.15 (0)
L,T,Z	58	0.116	6.728	15.59	5.61 (6)
R	477	0.025	11.925	27.63	9.95 (10)
K & S	7	0.100	0.700	1.62	0.58 (1)
V	4	1.000	4.000	9.27	3.34 (3)
Q	120	0.070	8.400	19.46	7.01 (7)
Total	1147		43.163	100.00	36.00 (36)

*Part classes are identified as follows:

C - Capacitors
CR - Diodes
J - Connectors
K - Relays
L - Coils
Q - Transistors
R - Resistors
S - Switches
T - Transformers
V - Tubes
Z - Impedance (L-C networks)

TABLE 2

AN/APX-46 MAINTAINABILITY PREDICTION TASK SAMPLE

Task No.	Ckt. Symbol Designation	Failure Mode	Task No.	Ckt. Symbol Designation	Failure Mode
1	CR-1412	Short	21	R-1207	Open
2	CR-1417	Open	22	R-1207	Short
3	CR-452	Open	23	R-1412	Open Wiper
4	CR-508	Open	24	R-204	Open
5	CR-626	Open	25	R-229	Open
6	CR-821	Short	26	R-514	Open
7	CR-904	Open	27	R-713	Open
8	C-118	Open	28	R-728	Open
9	C-713	Open	29	R-809	Open
10	FL-2	Open	30	R-923	Open
11	L-204	Open	31	S-1	Open Term. 1
12	L-217	Open	32	T-1	Open Primary
13	L-905	Open	33	T-203	Shorted Turns
14	Q-204	High I_{cbo}	34	V-102	Open Filament
15	Q-403	Open C to B	35	V-103	Short Grid to Cathode
16	Q-405	Short E to B	36	V-1202	Low G_m
17	Q-512	Short C to B	37	Receiver output to high	
18	Q-601	Open E to B	38	IF Amplifier Misaligned	
19	Q-802	High I_{cbo}	39	Wrong Clock Frequency	
20	Q-915	Short E to B	40	Reset Gate Misadjusted	

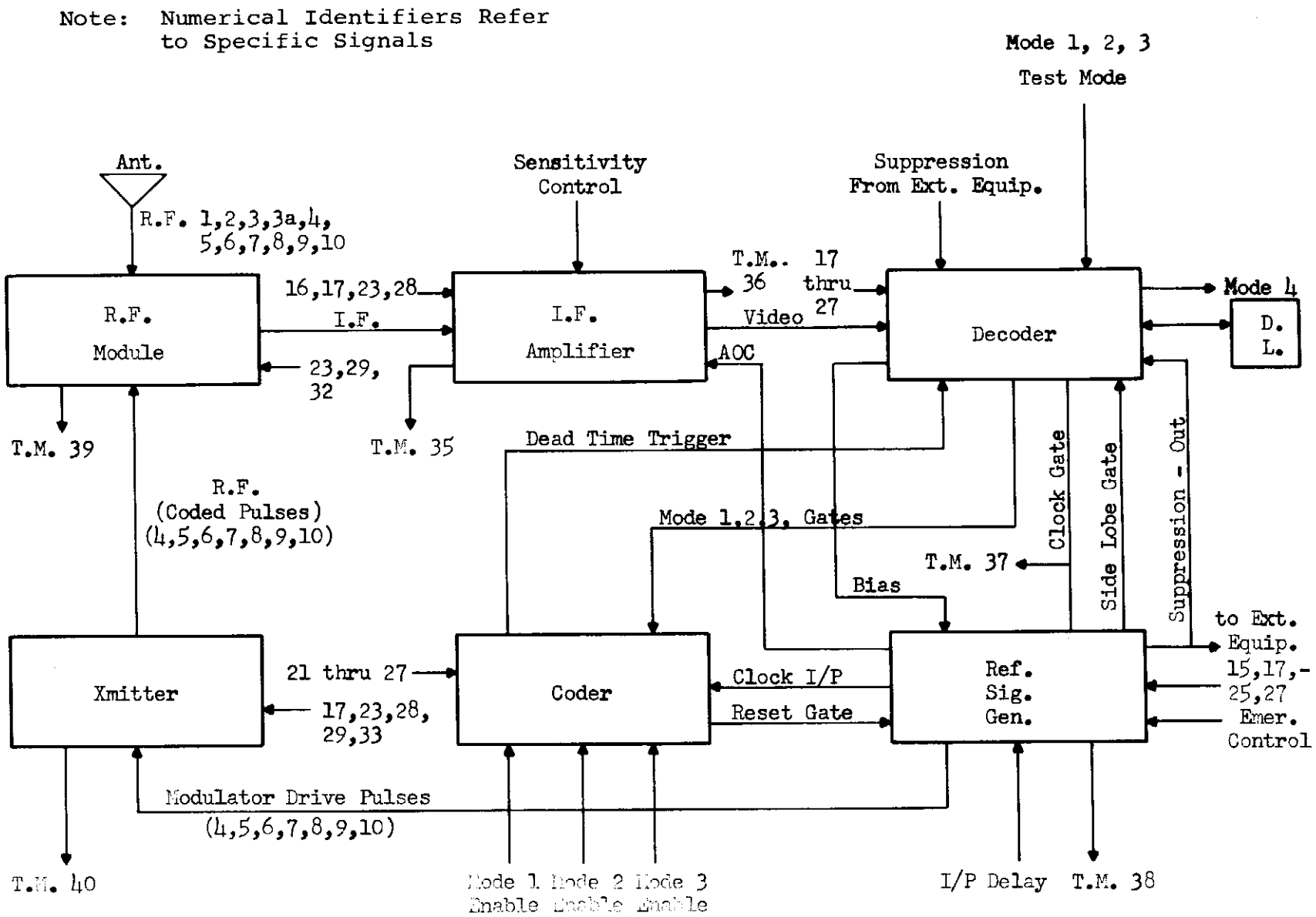

FIGURE 1. AN/APX-46 FUNCTIONAL BLOCK DIAGRAM

TABLE 3

MAINTAINABILITY PREDICTION FORM

Equipment AN/APX-46 Part CR-1412 Task No. 1

Assembly Power Supply By G. Griswold Date 19 May 1964

Primary function failed unit/part -20 Volt Rectifier

Mode of failure Shorted (very low front to back resistance ratio)

Malfunction symptoms No information (code pulses) being received or transmitted

Maintenance Analysis

Maintenance Steps	Scoring Comments
1. Set up equip. in test bench harness and energize	Connect test bench harness to J1 & AN/UPM-98 to J2 - Warm up equip.
2. Depress button on test module	The Xmtr-Osc. & Rec.-Vid. indicators do not light
3. Check power supply voltages	Use VTVM - Checks are made at stand-offs on PCB (through opening in the module cover). No -20VDC at TP 1402-B.
4. Remove P.S. module cover and check continuity in -20V rectifier circuit.	Two multiturn, non-captive screws & 2 hex-head nylon bolts have to be removed. Checks made with a PSM-6 (VOM) will find CR-1411 open & CR-1412 shorted. (T-1401 lead must be removed to determine CR condition)
5. Replace CR-1411 and CR-1412	Can be accomplished without further disassembly - soldering iron, pliers and heat sink required.

Checklist Scores

	1	2	3	4	5	6	7	8	9	10	11	12	13	14	15	Total
A	4	0	4	4	4	2	4	2	0	0	0	2	0	0	4	30
B	1	4	4	4	4	4	4	X	X	X	X	X	X	X	X	25
C	2	2	1	2	2	3	2	1	2	2	X	X	X	X	X	19

Predicted downtime..... 66.3 Min.

MAINTENANCE ANALYSIS CONTINUATION SHEET

Equip. AN/APX-46 Part CR-1412 Task No. 1

Maintenance Steps	Scoring Comments
6. Replace mod. cover and check equipment with test module	All indicators light
7. Check receiver sensitivity, transmitter power, output codes, control functions	Use UPM-98 and instructions contained in T.O. Proper values are given in MIL-T-38237
8. Disconnect equipment	Remove cables and place equipment on shelf.

these checklists are as follows: A, Scoring Physical Design Factors; B, Scoring Design Dictates-Facilities; and C, Scoring Design Dictates-Maintenance Skills. These checklists are presented in Appendix I of this report, together with all instructions necessary for scoring each item.

The scoring for each item ranges from 0 to 4. Intermediate values of 1, 2, and 3 are provided for some questions where the nature of the characteristic being assessed may take on intermediate magnitudes. This is contrasted to the yes-no situation. The questions have been framed in a manner that permits general application across equipment lines.

The last step in the prediction process is to calculate the predicted downtime (M_{ct}) for each task. This is accomplished by inserting the total checklist scores for each task in the following equation:

$$M_{ct} = \text{Antilog } (3.54651 - 0.02512A - 0.03055B - 0.01093C) \quad (2)$$

To facilitate this calculation, a nomograph was developed for the prediction equation, and is shown in Figure 2, "Nomograph-Down Time." The use of this nomograph permits the determination of downtimes directly in real time (instead of log values). All instructions for use of the nomograph are contained in the Figure.

2.4.3.2 Contractor Prediction

A maintenance analysis was performed on each of the selected tasks and the design checklists scored. The scores for each task were inserted in the prediction equation (Eq.2), and expected downtimes calculated. The results of the prediction are shown in Table 4. The predicted mean downtime for field corrective maintenance was determined by dividing the sum of the individual downtimes (2309.1 minutes) by the sample size (40), to get 57.7 minutes. The maximum downtime (95th percentile) was obtained through the use of the following equation:

$$M_{max} = \text{Antilog } (\log \overline{M}_{ct} + 0.5) \quad (3)$$

Substituting the value of the predicted mean in Equation 3 results in a value of 182.6 minutes.

2.4.3.3 AMRL Prediction

Subsequent to the two-week training course attended by ASD, RTD and AMRL engineers, four engineers were selected to serve as experimental subjects. These four engineers/subjects applied the

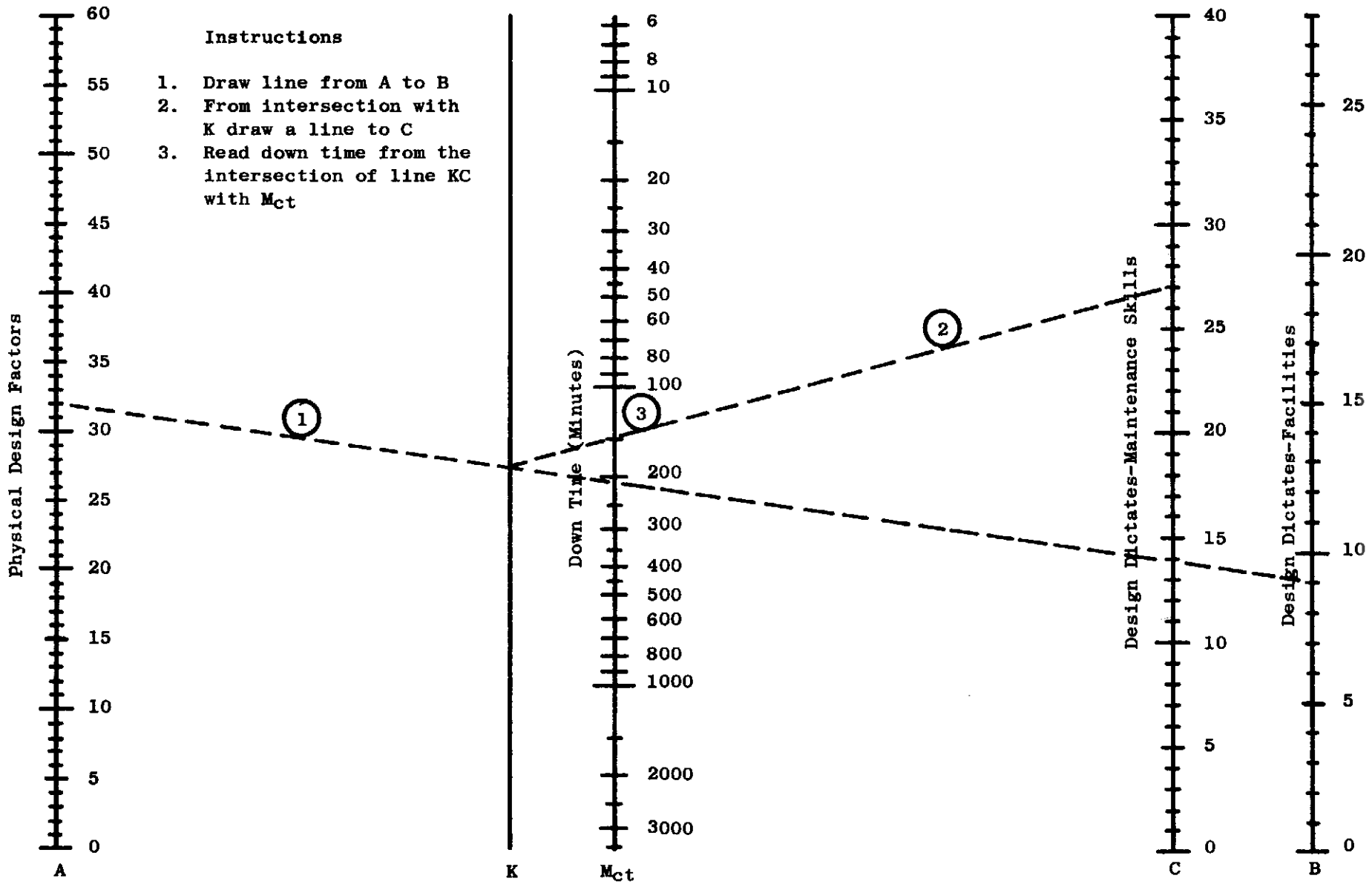

FIGURE 2. NOMOGRAPH - DOWN TIME

TABLE 4

AN/APX-46 MAINTAINABILITY PREDICTION

(Contractor)

Task No.	Unit	Part	Failure Mode	Checklist Score A	B	C	Log M_{ct}	M_{ct}
1	PP-2490	CR-1412	Short	30	25	19	1.82149	66.3
2	PP-2490	CR-1417	Open	38	25	20	1.60960	40.7
3	KY-318	CR-452	Open	36	23	14	1.78652	61.2
4	KY-318	CR-508	Open	36	25	18	1.68170	48.1
5	KY-319	CR-626	Open	30	22	14	1.96779	92.9
6	KY-319	CR-821	Short	36	25	23	1.62705	42.4
7	O-682	CR-904	Open	44	26	25	1.37368	23.6
8	RF-115	C-118	Open	28	23	13	1.99841	99.6
9	KY-319	C-713	Open	46	26	25	1.32344	21.1
10	MX-2938	FL-2	Open	34	25	21	1.69915	50.0
11	AM-2415	L-204	Open	30	24	14	1.90669	80.7
12	AM-2415	L-217	Open	30	24	14	1.90669	80.7
13	O-682	L-905	Open	38	25	22	1.58774	38.7
14	AM-2415	Q-204	High I_{cbo}	28	22	13	2.02896	106.9
15	KY-318	Q-403	Open C-B	38	25	23	1.57681	37.7
16	KY-318	Q-405	Short E-B	36	23	14	1.78652	61.2
17	KY-318	Q-512	Short C-B	36	25	24	1.61612	41.3
18	KY-319	Q-601	Open E-B	36	25	24	1.61612	41.3
19	KY-319	Q-802	High I_{cbo}	36	25	18	1.68170	48.1
20	O-682	Q-915	Short E-B	34	23	12	1.85862	72.2
21	T-757	R-1207	Open	28	23	12	2.00934	102.2
22	T-757	R-1207	Short	26	22	11	2.10106	126.2
23	PP-2490	R-1412	Open (Wiper)	38	23	13	1.74721	55.9
24	AM-2415	R-204	Open	30	24	14	1.90669	80.7
25	AM-2415	R-229	Open	30	22	11	2.00058	100.1
26	KY-318	R-514	Open	38	25	23	1.57681	37.7
27	KY-319	R-713	Open	46	26	25	1.32344	21.1
28	KY-319	R-728	Open	46	26	25	1.32344	21.1
29	KY-319	R-809	Open	36	25	22	1.63798	43.4
30	O-682	R-923	Open	36	25	21	1.64891	44.6
31	MX-2938	S-1	Open Ter. 1	36	25	20	1.65984	45.7
32	MX-2938	T-1	Open Pri.	30	25	19	1.82149	66.3
33	AM-2415	T-203	Short Turns	30	22	13	1.97872	95.2
34	RF-115	V-102	Open Fil.	28	24	20	1.89135	77.9
35	RF-115	V-103	Short g-c	28	24	21	1.88042	75.9
36	T-757	V-1202	Low G_m	30	24	23	1.80832	64.3
*37	Receiver output too high			56	26	26	1.06131	11.5
*38	IF Amplifier Misaligned			40	24	22	1.56805	37.0
*39	Wrong Clock Frequency			46	25	23	1.37585	23.8
*40	Reset Gate Misadjusted			46	25	23	1.37585	23.8
							Total	2309.1
							$\overline{M}_{ct}$	57.7

*Circuit Drift Failures

prediction method to the APX-46 for 32 of the initially defined 40 tasks. To obtain an estimate of rater agreement (reliability of the method), the four engineers made independent predictions for the first five tasks.

Table 5 presents the raw checklist scores and predicted M_{ct} for 32 of the selected 40 maintenance tasks on the APX-46. These scores were obtained by independent application of the method by four engineers who attended the training program. As mentioned previously, the first five tasks were predicted by all four engineers independently; of the remaining 35 tasks, only 27 were predicted. Tasks 19, 20, 29, 30 and 37-40 were not included due to insufficient time on the part of the participating engineers. The overall mean for M_{ct} was 62.7 minutes as determined by averaging predicted M_{ct} times across all four engineers.

2.5 Field Evaluation

The validity of the predictions made was to be judged by comparisons to time data secured from measurements of actual maintenance performance. Use of 66-1 data to fulfill this requirement was investigated, but rejected because of inability to clearly identify conditions under which data were secured. Securing data from observation of controlled simulation of AN/APX-46 maintenance was considered an acceptable means of obtaining the required information. A plan for guiding the accomplishment of the maintenance simulation was prepared and is presented in Appendix III.

Table 6 contains time data obtained from the field evaluation program. These times were obtained by a trained Industrial Engineer on four technicians at the 3510th Maintenance and Support Squadron at Randolph Air Force Base, Texas. Five of the original 40 tasks were unable to be completely simulated, due to the possibility of incurring irreparable damage to the equipment, or due to the inability to create failure symptoms. All technicians/subjects started their experimental task when presented with an AFTO Form 781A which contained the flight squawk. These flight squawks were prepared from the parts list and failure modes for the tasks by an experienced T-39 Instructor Pilot. When presented with the flight squawk, the technicians/subjects were required to fault-isolate the board or unit which contained the failed component, using two bench testers. The task was complete with the replacement of a good board. Where the simulated malfunction was in a unit other than a circuit board, the appropriate component repair action was made (resoldering wire on chassis, etc.), or the action was completed by the replacement of the whole unit. Task element times were recorded to the nearest tenth of a second, and totaled to yield a total maintenance action time for 35 of the 40 tasks. To partially account for between-subject variance, two subjects performed each task where subject

TABLE 5

AN/APX-46 MAINTAINABILITY PREDICTION

(AMRL)

Task No.	Checklist Score A	Checklist Score B	Checklist Score C	Log M_{ct}	M_{ct}
1a	33	25	19	1.71613	55.7
1b	37	25	23	1.60193	40.0
1c	45	26	29	1.30484	20.2
1d	49	26	28	1.20436	16.0
1s	41	26	24-3/4	1.45177	28.3
2a	37	25	21	1.62379	42.1
2b	37	25	23	1.60193	40.0
2c	35	24	22	1.69365	49.4
2d	42	26	27	1.40206	25.2
2s	37-3/4	25	25-1/4	1.58036	38.1
3a	45	23	21	1.48398	30.5
3b	49	24	22	1.34197	22.0
3c	38	9	16	2.14212	138.7
3d	32	25	22	1.73846	54.8
3s	41	20-1/4	20-1/4	1.67662	47.5
4a	45	25	20	1.43376	27.1
4b	49	24	22	1.34197	22.0
4c	30	11	16	2.28198	191.4
4d	36	25	21	1.64891	44.6
4s	40	21-1/4	19-3/4	1.67666	47.5
5a	43	23	19	1.55603	36.0
5b	49	24	22	1.34197	22.0
5c	32	13	16	2.17064	148.1
5d	45	26	25	1.34856	22.3
5s	42-1/4	21-1/2	20-1/2	1.60430	40.2
6	37	23	25	1.64117	43.8
7	45	23	23	1.46207	29.0
8	36	25	20	1.65984	45.7
9	40	23	20	1.62046	41.7
10	34	25	18	1.73194	53.9
11	33	25	26	1.66962	46.7
12	35	25	27	1.60845	40.6
13	39	23	28	1.55814	36.2
14	35	25	27	1.60845	40.6
15	40	23	27	1.54395	35.0
16	36	21	22	1.76018	57.6
17	36	21	22	1.76018	57.6
18	36	21	22	1.76018	57.6
21	30	20	19	1.97424	94.2
22	30	23	22	1.84980	70.8
23	32	25	22	1.73846	54.8
24	36	21	22	1.76018	57.6
25	36	21	22	1.76018	57.6

TABLE 5 (Cont'd.)

Task No.	Checklist Score A	B	C	Log M_{ct}		M_{ct}
26	36	21	22	1.76018		57.6
27	32	21	22	1.86066		72.6
28	32	21	22	1.86066		72.6
31	31	22	19	1.88802		77.3
32	32	24	17	1.82366		66.6
33	20	17	13	2.38267		241.4
34	28	20	21	2.00262		100.6
35	28	20	19	2.02448		105.8
36	34	19	15	1.94803		88.7
					TOTAL	2005.8
					$\overline{M}_{ct}$	62.7

TABLE 6

AN/APX-46 FIELD EVALUATION

Task No.	Measured Time Subject 1	Subject 2	Subject 3	Subject 4	Difference	Average
2		9.18	15.22		6.04	12.20
3	27.83			24.03	3.80	25.93
4		23.48	12.80		10.68	18.13
6		61.71			.00	61.71
7	31.00			14.85	16.15	22.93
8		9.25	4.73		4.52	6.98
9	46.12			19.31	26.81	32.71
10		24.35	39.63		15.28	31.98
11	10.07				.00	10.07
12		7.53	14.76		7.23	11.18
13	43.73			11.07	32.66	27.40
14		20.55	15.63		4.92	18.10
15	22.33			15.66	6.67	19.00
16		25.53	29.45		3.92	27.48
17	25.20			13.17	12.03	19.18
18		17.13	13.45		3.68	15.28
19	17.00			9.71	7.29	13.36
20		19.91	34.08		14.17	27.00
22	16.30			16.66	0.36	16.48
23		4.56	71.40		66.84	37.98
24	6.78			15.93	9.15	11.36
25			25.76		.00	25.76
26	27.70			22.36	5.34	25.03
27		16.15	23.71		7.56	19.91
28	23.43			13.12	10.31	18.28
29		27.78	29.93		2.15	28.86
31		52.25	23.33		28.92	37.88
32	24.33			34.18	9.85	29.25
33		7.95	20.95		13.00	14.45
34	6.27			6.73	0.46	6.50
35		11.38	10.17		1.21	10.76
37		5.07	2.60		2.47	3.83
38	9.88			29.76	19.88	19.81
39		10.23	26.17		15.94	18.20
40	8.15			29.80	21.65	18.98

task administrations were staggered as indicated in Table 6 to avoid systematic effects of task order. Columns Subject 1 - Subject 5 indicate the measured total task times to the nearest hundredth of a minute. The difference column is an attempt to roughly show between-subject variability in performing the tasks. Although by no means a true, stable measure of between-subject variance (since it is based on an N=2), the difference scores do indicate that variances attributable to individual differences could be expected to be quite high.

2.6 Data Analysis

2.6.1 General

The analyses investigate the reliability, agreement, and validity of the prediction technique. Reliability is concerned with the repeatability of predictions made, viz., two evaluators applying the technique to the same maintenance situation should obtain similar estimates. The agreement of the prediction technique is investigated by comparing data obtained from the AMRL and the contractor predictions.

Validity of the prediction technique is concerned with the ability to estimate accurately the equipment maintenance time requirements. Validity is investigated by comparing the predictions to field maintenance data collected. Results of these analyses are described in subsequent paragraphs.

2.6.2 Prediction Agreement and Rater Reliability

Technique agreement and reliability were examined at several levels, including total prediction. For the first two levels, the analysis made use of task data which were common to both the AMRL and contractor predictions.

Figure 3 presents a graphical comparison of the cumulative distribution obtained for each prediction. It will be noted that generally close agreement was achieved, with some deviation at each end. The plots were made on probability-log paper, and the resulting straight line approximation indicates that the log-normal distribution would be capable of describing both sets of data. The mean calculated for the common tasks predicted by AMRL and the contractor were 62.7, 62.6 minutes, respectively. Maximum downtimes were determined to 198.0 for AMRL, and 198.3 for the contractor prediction.

The Mann-Whitney U test was used to determine if the two sets of data come from the same population (Ref. 5). To perform this test, the two samples are combined and then ranked in order

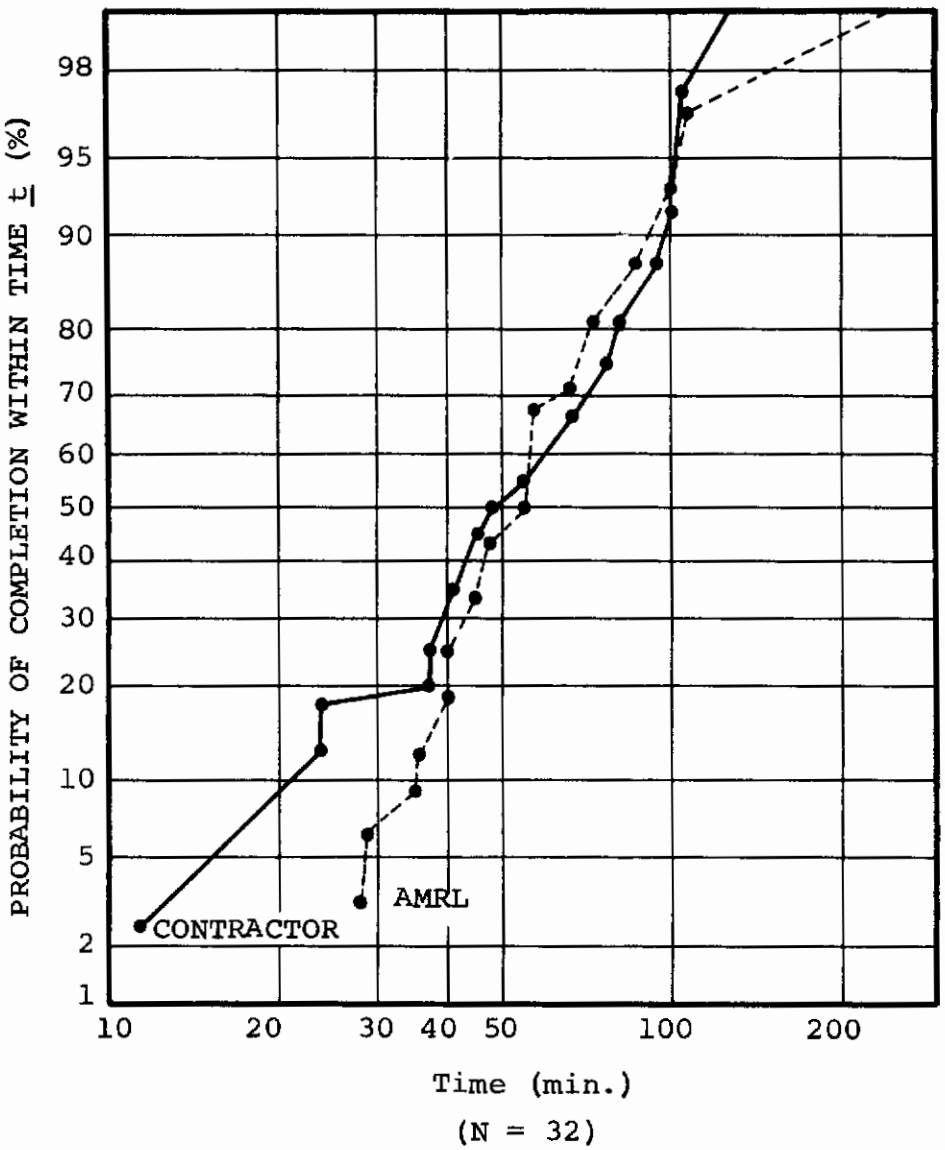

FIGURE 3. CONTRACTOR VS. AMRL CUMULATIVE PREDICTION DISTRIBUTIONS

of increasing size. A U value, μ, and a σ_μ are calculated, using appropriate formulas, and the significance is tested by calculating a Z value with the following equation:

$$Z = (U - \mu)/\sigma_\mu \qquad (4)$$

The value of Z is normally distributed with a mean of 0 and a standard deviation of 1 (Ref. 6). Testing at the 5% level would mean that Z would have to have a value of $\pm$ 1.96 or greater (two tail test) to be significant. The Z value calculated for the two predictions was 0.235, which indicates that there is no significant difference between the distributions of the samples.

Correlation analysis was used to examine the prediction data on a task-by-task basis. The Pearson product moment correlation coefficient was calculated and found to be .34, which approaches significance at the .05 level for N = 32. Figure 4 graphically illustrates this correlation relationship. Here, the times predicted for each task are used to identify the appropriate cell in the Figure. Perfect agreement would find all tasks represented within cells lying on the bisecting line between the ordinate and abscissa. As will be noted, some dispersion was encountered in the upper right quadrant.

AMRL also obtained a measure of technique reliability by comparing the results obtained on the first five tasks by the four different raters. Table 7 shows the Pearson product moment correlations between raters' scores for their tasks. Separate matrices are presented for each of the checklists (A, B and C). Although the correlations may be unstable due to the small N of paired measures, indications are that rater agreement is very low and, in fact, negative in a few instances. Checklist B (design dictates facilities) appears to be most reliably applied; indeed, for Task No. 1, perfect agreement was reached for four independent raters. The overall median intercorrelation for all tasks and checklists was r_{Mdn} = +.38; for Checklist A, r_{Mdn} = +.29; for Checklist B, r_{Mdn} = .65; and Checklist C, r_{Mdn} = +.29.

2.6.3 Technique Validity

Examination of the 35 tasks performed during the field evaluation revealed that 11 were not accomplished in accordance with the maintenance concepts established to guide the prediction. The cited tasks were performed by merely replacing modules, whereas the prediction was made upon the premise that the defective board or part within the module would be isolated and repaired or replaced. Action was taken to remove from the data sample those tasks which consisted solely of module replacement, while retaining those tasks which entailed any degree of examination within the module. This data screening resulted in 24 tasks, which were

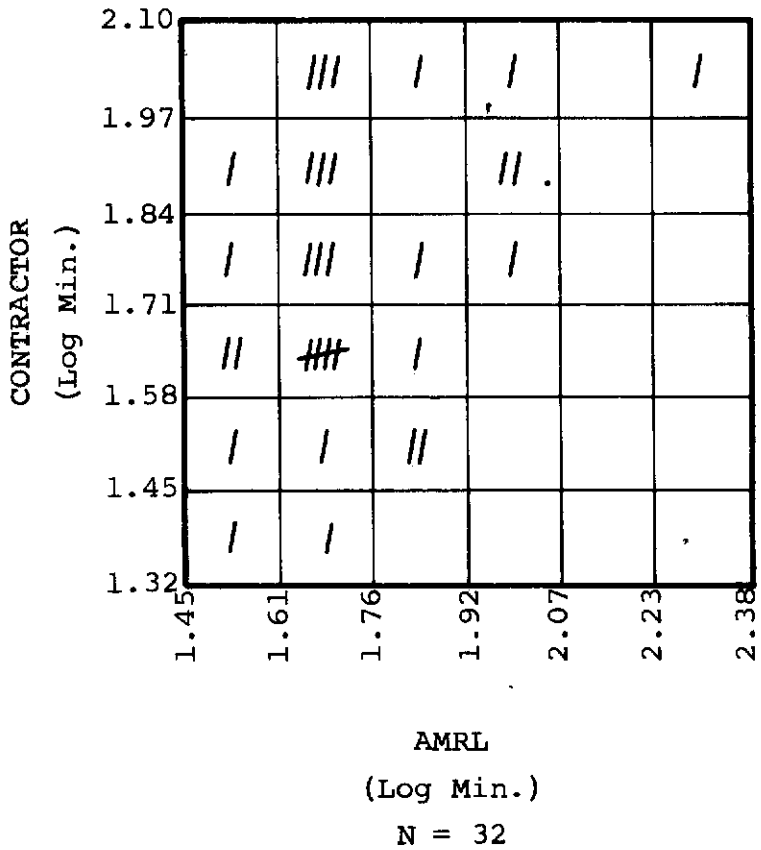

FIGURE 4. CONTRACTOR-AMRL PREDICTION SCATTERGRAPH

TABLE 7

RATER INTERCORRELATIONS*

TASK NO. 1

Checklist A (N=15)

Rater	1	2	3	4
1		+.40	+.70	+.43
2			+.22	-.15
3				+.09
4				

Checklist B (N=7)

Rater	1	2	3	4
1		+1.00	+1.00	+1.00
2			+1.00	+1.00
3				+1.00
4				

Checklist C (N=10)

Rater	1	2	3	4
1		+.47	-.02	-.47
2			+.39	+.20
3				+.22
4				

TASK NO. 2

Checklist A (N=15)

Rater	1	2	3	4
1		+.37	+.36	+.10
2			+.29	-.09
3				+.33
4				

Checklist B (N=7)

Rater	1	2	3	4
1		+1.00	+.65	+1.00
2			+.65	+1.00
3				+.65
4				

Checklist C (N=10)

Rater	1	2	3	4
1		+.35	+.48	-.14
2			+.66	+.23
3				-.04
4				

TASK NO. 3

Checklist A (N=15)

Rater	1	2	3	4
1		-.71	+.38	+.29
2			+.37	-.02
3				-.19
4				

Checklist B (N=7)

Rater	1	2	3	4
1		+.43	+.48	+.79
2			-.15	+.65
3				+.13
4				

Checklist C (N=10)

Rater	1	2	3	4
1		+.61	-.22	-.07
2			+.54	+.38
3				+.42
4				

*Pearson Product Moment Coefficients of Correlation

TABLE 7 (Cont'd.)

TASK NO. 4

Checklist A (N=15)

Rater	1	2	3	4
1		-.10	+.51	+.52
2			0	-.27
3				+.70
4				

Checklist B (N=7)

Rater	1	2	3	4
1		+.65	+.18	+1.00
2			+.04	+.65
3				+.18
4				

Checklist C (N=10)

Rater	1	2	3	4
1		+.68	0	0
2			+.53	+.47
3				+.46
4				

Checklist A (N=15)

Rater	1	2	3	4
1		-.18	+.09	+.36
2			+.09	+.45
3				-.22
4				

Checklist B (N=7)

Rater	1	2	3	4
1		+.43	+.69	+.65
2			+.20	+.65
3				+.31
4				

Checklist C (N=10)

Rater	1	2	3	4
1		+.07	-.15	-.15
2			+.53	-.09
3				+.29
4				

accomplished in a manner approaching the basis upon which the prediction was made. The prediction estimates made by the contractor corresponding to the 24 tasks formed the basis for the subsequent data analysis.

Figure 5 presents a graphical comparison of the field data and the contractor prediction. The calculated means for these data were 26.1 and 40.6 for the field and contractor, respectively. Due to the difference in the means and the observance of the same general slope for the curves, it was concluded that the prediction was over-estimating the task time by a systematic amount. This position was further substantiated by the correlation of Spearman $r = .37$ for $N = 24$ (.05 level = .30) calculated for the two data sets. A previous study had shown that time data derived through simulated maintenance situations were generally less than the corresponding actual field maintenance environment. An equation (Ref. 3) developed previously to express this relation was:

$$M_{field} = (M_{lab})^{1.227} \tag{5}$$

This equation was applied to the field data and the resultant distribution was compared to the contractor prediction in Figure 5. Note that much closer agreement between the data is achieved. The Mann-Whitney U Test was applied to the contractor prediction and the transformed field data, with the result of no significant difference indicated ($Z = 1.13$ for $N = 24$). Prior to transformation, Z was calculated to be 3.3.

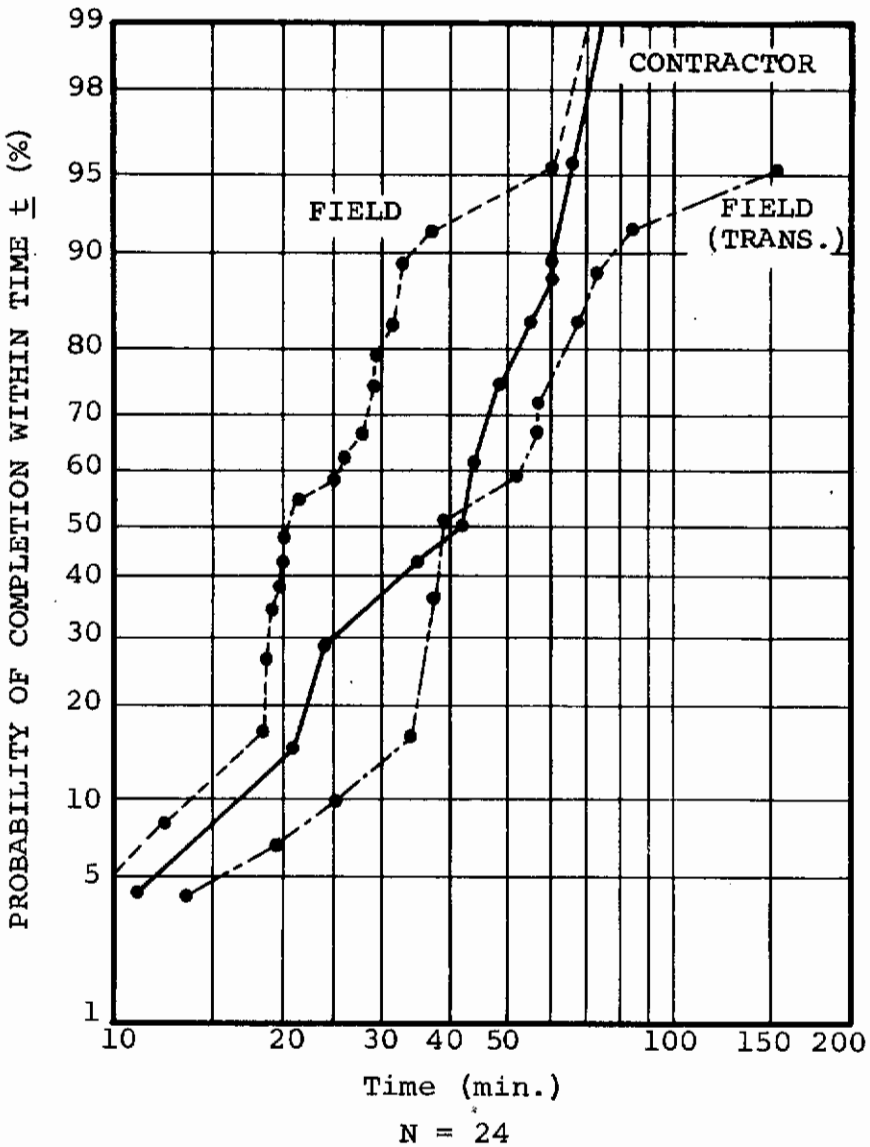

FIGURE 5. CONTRACTOR PREDICTION VS FIELD EVALUATION

SECTION III
CONCLUSIONS

3.1 Reliability and Prediction Agreement

The agreement of the two predictions, when viewed from the standpoint of mean downtime, was found to be extremely close, as evidenced by the respective means of 62.6 and 62.7. Analysis of the cumulative distributions indicates close similarity, which further amplifies the general agreement at this level. However, the moderate correlation found, when the data were analyzed on a task-by-task basis, tends to diminish the importance of the overall agreement. Failure to achieve high correlation at the task level is directly traceable to the marginal median correlation found for rater comparisons. Checklists A and C with r's = +.29 form the area of difficulty.

Low rater correlation can stem from two sources; namely, improperly constructed checklists, and/or use of raters not fully qualified to perform effective application. Objective evaluation of the checklists exhibiting low correlation indicates that some questions are contained in each that require considerable understanding of maintenance processes for their consistent application. Further, successful checklist application requires that the rater be capable of performing a detailed maintenance analysis for each task evaluated. Although raters employed by this study were trained in the use of the technique, the raters as a group possessed limited maintenance experience. Since the technique as it is now constructed required considerable maintenance experience, the results obtained represent a predictable outcome.

The formulation of checklist criteria for the technique which requires less maintenance experience constitutes a worthy objective. Inclusion of qualitative maintainability requirements on an increasing number of equipments and systems will no doubt present an analysis workload which exceeds the capabilities of personnel thoroughly skilled in maintenance engineering. Ideally, the technique development to minimize skill requirements would eliminate the need to perform a maintenance task analysis. Questions would be constructed in such a manner that merely reviewing the various equipment design features would yield unambiguous answers. Recasting the technique in this manner will require the development of new checklist criteria, securing of appropriate maintenance data, and formulation of a modified regression equation. Redirection of the technique as proposed may impose loss in predictive accuracy, although such judgment at this time can only be speculative.

3.2 Validity

Due to the inability to secure criterion data which fully represent a measure of maintenance as performed in the field environment, the validity of the technique for airborne equipment was not proven by this study. However, on the basis of correlation achieved between the prediction and the criterion data, there is some evidence that validity might be proven for representative data. This position is further suggested by the agreement achieved between the transformed data and the predicted values. The study has shown the technique capable of indicating the relative maintenance requirements for airborne equipment field maintenance.

SECTION IV

TECHNICAL RECOMMENDATIONS

4.1 Application of the Technique

This study has investigated the applicability of the maintainability prediction technique to evaluation of field maintenance performed on airborne electronic equipment. Although the technique's ability to predict downtime within statistical limits was not proven, it has been shown capable of demonstrating the relative maintenance requirements. The study has indicated that successful technique application must be accomplished by personnel thoroughly familiar with maintenance processes. Further application of the technique to airborne electronic equipment must be made within the context cited.

4.2 Development of the Technique

Investigations accomplished to date pertinent to the use of the maintainability technique studied here, indicate that the underlying principles are sound. Use of the regression process on which the technique is based provides the capability to evaluate the maintenance situation as a whole. Techniques which employ time standards must construct a maintenance model which ideally represents the process, but may differ widely from the method actually used. The checklists employed by the regression process, inventory the varied equipment features which can produce deviations from the ideal processes, thus permitting an accurate appraisal of maintenance requirements to be assessed.

The study performed has indicated that the regression technique as presently constituted requires strengthening for the application to airborne equipment. Development of checklists which possesses greater reliability in the data produced and less skill for application is indicated. Formulation of new checklists would necessitate the collection of data pertinent to these criteria and the subsequent development of a prediction equation (regression) expressly for the airborne maintenance environment. It is felt that this action can produce a prediction technique for the airborne maintenance situation which is truly sensitive and an accurate predictor of maintenance time requirements.

APPENDIX I

SCORING CHECKLISTS

1. INTRODUCTION

This appendix contains the prediction technique checklists used for evaluating (scoring) the maintainability design features of an equipment. A discussion proceeds each checklist which delineates the general scope of the equipment characteristics to be evaluated. Following the checklist, scoring criteria are provided for each question to facilitate proper evaluation.

2. CHECKLIST A - SCORING PHYSICAL DESIGN FACTORS

The intent of this checklist is to determine the impact of equipment packaging, physical layout, etc., upon maintenance time. Data analysis reveals that the aspects considered by this checklist exhibit the greatest influence upon maintenance time. Consequently, particular attention must be exercised during the completion of this checklist.

2.1 Discussion

Questions 1 through 4 consider access, both internal and external, in association with facility with which it can be gained. The external aspect relates to covers, panels, drawers, etc., which appear on the periphery of the equipment. Shields, safety enclosures, etc., would come under evaluation when considering the internal portion.

Methods of securing modules, components, and parts are of concern in questions 5 and 6. These questions would be rated with respect to the part assumed failed in association with other units which may come under surveillance in the course of the troubleshooting action. Since testing of some part types requires removal from the circuit, the facility with which this may be accomplished is important. Also, the time required to replace the defective unit is of concern.

Questions 7 through 11 relate to securing maintenance information required to diagnose logically the defective part. Examination of maintenance data has provided that this element of time contributes more than 50 percent to total maintenance requirements. The intent of this series of questions is to determine the relative ease with which the needed data may be secured. Further, it is to be determined if these data are supplied directly by the equipment through built-in indicators or test equipment, or if external test devices are required.

Additionally, identification and labelling of test points and parts are assessed because of their contribution to the diagnostic process.

Question 12 determines the need for circuit adjustments. Such adjustments can be time consuming, hence this area is of vital importance. The ability to test the defective part without removal from the circuit is determined by question 13. The facility to accomplish in-circuit testing will further aid the maintenance process.

Question 14 and 15 consider protective devices and safety precautions which must be exercised by maintenance personnel. Safety shield, interlocks, etc., are necessary precautionary devices which must be provided in equipment possessing hazards such as high voltage, x-rays, etc. Although they are necessary, their presence will slow the maintenance task accomplishment. Consequently, such situations must be appraised.

Figure 6 illustrates the point of applicability of each Checklist A question for various construction concepts. Across the top of the matrix levels of construction as identified by MIL-STD-829 have been listed. The vertical column on the left references each checklist question. Numeric identifiers within the matrix reference scoring instructions listed at the bottom of the matrix. For example, if an equipment with replaceable modules was being evaluated the matrix would indicate the portion of the equipment to be considered in scoring each question.

2.2 Checklist A, Scoring Physical Design Factors

1. Access (External)

   a. Access adequate both for visual and manipulative tasks (electrical and mechanical).....4

   b. Access adequate for visual, but not manipulative, tasks.....2

   c. Access adequate for manipulative, but not visual, tasks.....2

   d. Access not adequate for visual or manipulative tasks.....0

2. Latches and Fasteners (External)

   a. External latches and/or fasteners are captive, need no special tools, and require only a fraction of a turn for release.....4

FIGURE 6

MAINTENANCE LEVEL VS CHECKLIST ITEM SCORING

ITEMS IN CHECKLIST A	UNIT LEVEL						
	External				Internal		
	System	Sub-System	Equipment	Component	Assembly (Major Module)	Sub-Assembly (Module)	Part (Micro-Module)
1	1	1	1	1	-	-	-
2	1	1	1	1	-	-	-
3	N/A	N/A	N/A	N/A	2	-	-
4	N/A	N/A	N/A	N/A	3	3	-
5	N/A	N/A	N/A	N/A	N/A	2	-
6	N/A	N/A	N/A	N/A	N/A	N/A	2
7	3	3	3	3	3	3	3
8	3	3	3	3	3	3	3
9	3	3	3	3	3	3	3
10	3	3	3	3	3	3	3
11	N/A	N/A	N/A	N/A	N/A	N/A	2
12	3	3	3	3	3	3	3
13	N/A	N/A	N/A	4	4	4	4
14	1	1	1	1	1	1	1
15	3	3	3	3	3	3	3

1. Score worst case among applicable units
2. Score for this unit only
3. Score the composite of the applicable units
4. Score for the lowest replaceable unit

N/A This item is not applicable when this is the lowest replaceable unit

b. External latches and/or fasteners meet two of the above three criteria.....2

c. External latches and/or fasteners meet one or none of the above three criteria.....0

___

3. Latches and Fasteners (Internal)

a. Internal latches and/or fasteners are captive, need no special tools, and require only a fraction of a turn for release.....4

b. Internal latches and/or fasteners meet two of the above three criteria.....2

c. Internal latches and/or fasteners meet one or none of the above three criteria.....0

___

4. Access (Internal)

a. Access adequate both for visual and manipulative tasks (electrical and mechanical).....4

b. Access adequate for visual, but not manipulative, tasks.....2

c. Access adequate for manipulative, but not visual, tasks.....2

d. Access not adequate for visual or manipulative tasks.....0

___

5. Packaging

a. Internal access to components and parts can be made with no mechanical disassembly.....4

b. Little disassembly required (less than 3 min.).....2

c. Considerable disassembly is required (more than 3 min.).....0

___

6. Units - Parts (Failed)

a. Units or parts of plug-in nature.....4

b. Units or parts of plug-in nature and mechanically held.....2

c. Units of solder-in nature.....2

d. Units of solder-in nature and mechanically held.....0

___

7. Visual Displays

a. Sufficient visual information on the equipment is given within one display area.....4

b. Two display areas must be consulted to obtain sufficient visual information.....2

c. More than two areas must be consulted to obtain sufficient visual information.....0

___

8. Fault and Operation Indicators (Built-in Test Equip.)

a. Fault or malfunction information is provided clearly and for rapid action.....4

b. Fault or malfunction information clearly presented, but requires operator interpretation.....2

c. Fault or malfunction information requires no operator interpretation, but is not clearly presented.....2

d. Fault or malfunction information not clearly presented and requires operator interpretation.....0

___

9. Test Points (Availability)

a. Task did not require use of test points.....4

b. Test points available for all needed tests.....3

c. Test points available for most needed tests.....2

d. Test points not available for most needed tests.....0

___

10. Test Points (Identification)

a. All test points are identified with required readings given.....4

b. Some are suitably marked.....2

c. Points are not marked and test data are not given....0

___

11. Labelling

a. All parts labelled with full identifying information and all identifying information clearly visible.....4

b. All parts labelled with full identifying information but some information hidden.....2

c. All information visible, but some parts not fully identified.....2

d. Some information hidden and some parts not fully identified.....0

___

12. Adjustments

a. No adjustments or realignment are necessary to place equipment back in operation.....4

b. A few adjustments, but no major realignments are required.....2

c. Many adjustments or major realignments must be made.....0

___

13. Testing (In Circuit)

a. Defective part or component can be determined without removal from the circuit.....4

b. Testing requires removal.....0

___

14. Protective Devices

a. Equipment was automatically kept from operating after malfunction occurred to prevent further damage. (This refers to malfunction of such areas as bias supplies, keep-alive voltages, etc.).....4

b. Indicators warned that malfunction has occurred.....2

c. No provision has been made.....0

___

15. Safety (Personnel)

a. Task did not require work to be performed in close proximity to hazardous conditions (high voltage, radiation, moving parts and/or high temperature parts).....4

b. Some delay encountered because of precautions taken.....2

c. Considerable time consumed because of hazardous conditions.....0

2.3 Checklist A Scoring Criteria

Item No. 1 External Access

Determines if the external access to systems, subsystems, equipments, or components is adequate for visual inspection and manipulative actions. Scoring applies to access problems for actions performed on the exterior of the external units and considers the extent of disassembly required to gain access to the interior of the components. Items to be considered include: access plates, panels, dust covers, cables, and other obstructions which interfere with maintenance.

Scoring Criteria

a. To be scored when the external access, while visual and manipulative actions are being performed on the exterior of the component, does not cause delay because of obstructions (cables, panels, supports, etc.).

b. To be scored when the external access is adequate (no delay) for visual inspection, but not for manipulative actions. External screws, covers, panels, etc., can be located visually; however, external packaging or obstructions hinders manipulative actions (removal, tightening, replacement, etc.)

c. To be scored when the external access is adequate (no delay) for manipulative actions, but not for visual inspections. This applies to the removal of external covers, panels, screws, cables, etc., which present no difficulties; however, their location does not easily permit visual inspection.

d. To be scored when the external access is not adequate (delay) for both visual and manipulative tasks. External covers, panels, screws, cables, etc., cannot

be easily removed nor visually inspected because of external packaging or location.

Item No. 2 Latches and Fasteners (External)

Determines the facility with which screws, clips, fasteners, cable connectors, or latches external to the component or higher level units, can be manipulated. Scoring will relate the external equipment packaging and hardware to maintainability design concepts. The time consumed with preliminary external disassembly will be proportional to the type of hardware and the tools needed. (A cross-point screwdriver is considered a standard tool and an Allen (hex) wrench a special tool.

Scoring Criteria

a. To be scored when external screws, latches, and fasteners are:

   (1) Captive
   (2) Do not require special tools
   (3) Can be released with a fraction of a turn

   Releasing a DZUS fastener which requires a 90 degree turn using a standard screwdriver is an example of all three conditions.

b. To be scored when external screws, latches, and fasteners meet only two of the three conditions stated in (a) above; a screw which is captive and can be removed with a standard or Phillips screwdriver, but requires several full turns for release.

c. To be scored when external screws, latches, and fasteners meet only one or none of the three conditions stated in (a) above. An action requiring an Allen wrench and several full turns for release shall be considered as meeting only one of the above requirements.

Item No. 3 Latches and Fasteners (Internal)

Determines the facility with which screws, clips, fasteners, cable connectors, or latches in the component-assembly interface can be manipulated. Scoring will relate internal equipment construction to maintainability design concepts. The types of latches and fasteners will tend to affect the task by reducing or increasing the time required to remove and replace them.

Scoring Criteria

Same as for Item No. 2

Item No. 4 Access (Internal)

Determines if the internal (assembly or subassembly) access is adequate for visual inspection and manipulative actions. This item applies to internal packaging concepts in relation to design for ease of maintenance. "Internal" is to mean all work accomplished after gaining access to a component.

Scoring Criteria

a. To be scored when the internal access, while performing manipulative or visual actions in an assembly or subassembly, does not cause delay because of the internal construction or part location.

b. To be scored when the internal access is adequate (no delay) for visual inspection, but not for manipulative actions. Modules or parts can be located visually during the maintenance tasks; however, internal construction or part location hampers manipulative actions (testing, removal, etc.)

c. To be scored when the internal access is adequate (no delay) for manipulative actions, but not for visual inspections. (Internal construction does not impede the use of tools or test equipment on modules or parts; however, their physical location does not permit direct visual inspection.

d. To be scored when internal access is not adequate (delay) for both visual and manipulative tasks.

Item No. 5 Packaging

This item deals with the mechanical problems involved in removing failed subassemblies.

Scoring Criteria

a. To be scored when less than one minute is required to remove the failed subassembly.

b. To be scored when less than three minutes are expended in removing the failed subassembly.

c. To be scored when more than three minutes are expended in removing the failed subassembly.

Item No. 6 Units - Parts

Determines the manner in which parts are removed or replaced during the maintenance action. Since parts are electrically and/or mechanically secured in equipments in many different ways, the time to remove such items varies considerably. Mechanically held items are defined as those which require the use of a tool to remove. Soldered items include resistors, capacitors, etc.

Scoring Criteria

a. To be scored when parts are plug-in types requiring only to be pulled out. Plug-in type parts include tubes, some relays, crystals, etc.

b. To be scored when parts are plug-in types, but are mechanically held by clips, shields, or clamps, requiring the use of a tool for removal.

c. To be scored when parts are soldered-in types such as resistors, capacitors, etc., when the removal of parts requires the unsoldering of part terminations.

d. To be scored when parts are soldered-in mechanically held types such as transformers, jacks, etc. The removal or replacement of parts requires mechanical disassembly and unsoldering.

Item No. 7 Visual Displays

Determines if sufficient visual information pertaining to the equipment malfunction is displayed within one area. Circuit indicators, fuse lights, CRT Displays and meters provide, to some extent, symptom analysis. Therefore, it is important that these indications be displayed within one area to insure rapid analysis and action. If several areas must be consulted before a qualified estimation of the difficulty can be made, additional time is required. (A display area is considered to be the field of vision of a technician when occupying one physical location.)

Scoring Criteria

a. To be scored when visual information associated with the fault or malfunction is displayed within one area. Applicable if diagnosis and repair can be accomplished successfully following symptoms derived from one display area of the system.

b. To be scored when two display areas must be consulted to provide visual information associated with the fault or malfunction; two separate display areas on

the system (meter panel and fault indicators) must be consulted to diagnose malfunctions successfully.

c. To be scored when more than two areas must be consulted to provide visual information associated with the fault or malfunction.

Item No. 8 Fault & Operation Indicators (Built-In Test Equipment)

Determines if an equipment malfunction or fault is clearly discernible via audible alarms, indicators, meters, displays, etc., and that such information is clearly presented to facilitate fault isolation. The use of indicators is increased as complexity increases, and equipment availability becomes more important. Although visual and audio alarms usually indicate that a problem exists, they do not always determine the exact location of the malfunction. The more precise the indication, the better the maintenance condition.

Scoring Criteria

a. To be scored when an equipment fault or malfunction occurs and is evidenced by alarms, indicators, meters, displays, etc., which provide for fault diagnosis. An example of this would be when a power supply module failure occurs and is indicated by a loss of an operational display and an incorrect meter reading.

b. To be scored when an equipment fault or malfunction occurs and is evidenced by alarms, indicators, etc., but requires further tests for isolation of the fault. Loss of output power is evidenced by an alarm; however, further diagnosis must be made to determine the exact cause of trouble.

c. To be scored when an equipment fault or malfunction occurs and is not clearly determined by alarms, indicators, etc.; however, provisions for diagnosis and maintenance action are available. Applies when the condition of the fault indicators are not easily determined to provide a direct indication of the cause of failure.

d. To be scored when an equipment fault or malfunction occurs and is not clearly discernible, and which requires symptom interpretation. The use of external test equipment is also necessary to determine the equipment status and cause of failure.

Item No. 9 Test Points (Availability)

Determines if test points are available for needed tests pertaining to the maintenance action. A test point shall be considered as any test probe receptacle where specific system operation data can be obtained. This definition eliminates as test points connector pins on printed circuit boards, terminals, tube pins, etc. The number of test points available and the amount of information yielded will affect the time to establish the cause and location of the fault.

Scoring Criteria

a. To be scored when the maintenance action did not require the use of test points, but when, instead, the malfunction can be diagnosed and repaired via built-in test equipment.

b. To be scored when all needed tests were accomplished at test points. Sufficient information to diagnose and repair the trouble was available at test points.

c. To be scored when over 51% of the required tests were accomplished at test points.

d. To be scored when the majority of needed tests were not accomplished at test points. Malfunction diagnosis and repair required the making of tests for which few or no test points were available. (50% or less.)

Item No. 10 Test Points (Identification)

Determines if test points required during the maintenance action are properly identified by circuit symbol and pertinent test data. This precise information provides diagnostic data to aid in troubleshooting the malfunction. Troubleshooting at test points is a cause for delay when the required voltage readings, signal characteristics, etc., are not specified.

Scoring Criteria

a. To be scored when all test points needed for task completion are identified (circuit symbol), with required readings given (+6VDC, 115VAC, waveform, etc.). This is indicative of a best maintainable condition.

b. To be scored when over 50% of test points required for task completion are suitably identified.

c. To be scored when 50% or less of the test points required for task completion are suitably identified.

Item No. 11 Labelling

Determines if parts associated with the maintenance actions are identified with respect to circuit symbol and part identification. Proper identification of parts can be an important asset to the maintenance task in that, if part circuit number is omitted from the equipment, considerable time could be wasted tracing the circuit to identify it. Similarly, if information is hidden, requiring removal of other parts to read it, much time will be consumed. (Part identification includes part type or value; standard color coding is an acceptable method for providing the needed information.)

Scoring Criteria

a. To be scored when all parts associated with the maintenance action are identified and this information is clearly visible. To include testing or removing of parts that are clearly identified (V401-6BE6) or (R-1225-400Ω).

b. Applies when all parts associated with the maintenance action are identified, but some of this information is not visible. Applies to testing or removing parts that are labelled, but which information for some of the parts is hidden by obstructions.

c. Applicable when all circuit symbols are visible, but some parts associated with the tasks are not identified. Parts required for testing or removal are not identified with reference to part value, etc.

d. To be scored when some parts associated with the maintenance task contain hidden circuit symbols and are not fully identified. Parts required in testing or removal are not identified and information is also hidden. Also applies when all parts associated with the maintenance task are not identified.

Item No. 12 Adjustments

Determines if adjustments such as tuning and alignment are required, after a maintenance action, to make the equipment operate according to specifications. An adjustment will be any action which resets or changes variable parts such as potentiometers, variable capacitors, slug-tuned coils, etc., whereby the

operation of the system is affected. These actions, depending upon their criticality and frequency, will affect the overall maintenance time.

Scoring Criteria

a. To be scored when no adjustments are required to bring the equipment back to normal operating specifications. Applied to repair of the malfunction, if the equipment need only be turned on.

b. To be scored when a few adjustments of a minor nature (less than three minutes) are required to place equipment back in operation according to specifications.

c. To be scored when many adjustment (time-consuming) or a major tuning or alignment is required to place equipment back to normal operating specifications.

Item No. 13 Testing (In Circuit)

Determines if the defective, replaceable unit can be tested without removal from the circuit (electrically or mechanically). This question is based on the nature of the equipment and the repair concepts associated with the particular design.

Scoring Criteria

a. Applicable when the replaceable unit can be decisively determined as being defective without removal of any unit from the circuit.

b. To be scored when the replaceable unit must be removed from the circuit to be decisively determined as defective. When testing has isolated the trouble to a particular unit, but a definite opinion cannot be made until such part or component is electrically or physically removed from the circuit for further testing.

Item No. 14 Protective Devices

Encompasses equipment design provisions for self-protection against damage to components or parts after a malfunction has occurred. If a system has protective devices such as fuses, circuit breakers, etc., then the equipment can be protected from further damage as well as aiding in isolating the malfunction. If no provisions have been made, further damage and increased repair time could result. (This item does not apply if protective devices are not needed to prevent further damage in case of a failure.)

Scoring Criteria

a. To be scored when automatic shut-off devices protected the units from further damage after a malfunction occurred in a critical area. A typical example of such a malfunction would be if the bias supply fails and B+ voltage is automatically cut off by a circuit breaker, fuse, or relay action.

b. To be scored when automatic shut-off devices do not protect the units from further damage, but when visual indicators or audible alarms warn personnel of the situation.

c. To be scored when a critical malfunction occurs and the units are not protected by automatic shut-off devices, indicators, or alarms. Involves malfunction which damages other units because automatic shut-off devices or alarms were not provided.

Item No. 15 Safety (Personnel)

Determines if the maintenance action requires personnel to work under hazardous conditions such as close proximity to high voltage, radiation, moving parts, high temperature components, or on elevated structures, etc. (High voltage is considered to be above 500 volts.)

Scoring Criteria

a. To be scored when the maintenance action did not require personnel to work under hazardous conditions. The maintenance action did not require precautions to be taken, in that the task was not associated with high voltage, moving parts, etc.

b. To be scored when precautions were taken because of hazardous conditions, causing slight delays (one to three minutes) in the maintenance action. A typical example would be when a shorting probe must be used to discharge high voltage capacitors.

c. To be scored when precautions taken because of hazardous conditions caused a considerable delay (over three minutes) to the maintenance action. Maintenance required that testing be done in close proximity to high voltage where extreme caution was necessary, or the closeness of moving parts (gears, motors, etc.), caused delay because of precautions taken.

3. CHECKLIST B - SCORING DESIGN DICTATES-FACILITIES

The intent of this questionnaire is to determine the need for external facilities. Facilities, as used here, include material such as test equipment, connectors, etc., and technical assistance from other maintenance personnel, supervisor, etc.

3.1 Discussion

Questions 1 through 3 evaluate the material requirement. Such requirements can best be determined from a maintenance analysis of the assumed tasks. This analysis will establish the need for test equipment and other materials.

Technical assistance requirements are evaluated by questions 4 through 7. Evaluation of these questions can best be accomplished by viewing task requirements as imposed by the equipment with respect to the typical technician's capabilities. It has been found that the average Air Force technician is a high school graduate who has had 20 to 36 weeks of training in electronic fundamentals and specialized equipment. He receives additional on-the-job training after being assigned to a field maintenance activity. On the average, he is 24 years old and has been in the service 4.6 years. His attitude and motivation toward his job have been found to be satisfactory. Specific experience on the assigned equipment was noted to be 1.3 years. Reviewing detailed analysis of maintenance tasks performed by Air Force technicians has provided that a logical or systematic approach to the defective part normally is not used. The equipment task requirements for personnel viewed within this framework should permit effective scoring of this checklist.

3.2 Checklist B - Scoring Design Dictates - Facilities

1. External Test Equipment

   a. Task accomplishment does not require the use of external test equipment.....4

   b. One piece of test equipment is needed.....2

   c. Several pieces (2 or 3) of test equipment are needed.....1

   d. Four or more items are required.....0

   ___

2. Connectors

   a. Connectors to test equipment require no special tools, fittings, or adapters.....4

b. Connectors to test equipment require some special tools, fittings, or adapters (less than two).....2

c. Connectors to test equipment require special tools, fittings, and adapters (more than two).....0

___

3. Jigs or Fixtures

a. No supplementary materials are needed to perform task.....4

b. No more than one piece of supplementary material is needed to perform task.....2

c. Two or more pieces of supplementary material are needed.....0

___

4. Visual Contact

a. The activities of each member are always visible to the other member.....4

b. On at least one occasion, one member can see the second, but the reverse is not the case.....2

c. The activities of one member are hidden from the view of the other on more than one occasion.....0

___

5. Assistance (Operations Personnel)

a. Task did not require consultation with operations personnel.....4

b. Some contact was required.....2

c. Considerable coordination required.....0

___

6. Assistance (Technical Personnel)

a. Task required only one technician for completion.....4

b. Two technicians were required.....2

c. Over two were used.....0

___

7. Assistance (Supervisors or Contract Personnel)

a. Task completion did not require consultation with supervisor or contract personnel.....4

b. Some help needed.....2

c. Considerable assistance needed.....0

3.3 Checklist B - Scoring Criteria

Item No. 1 External Test Equipment

Determines if external test equipment is required to complete the maintenance action. The type of repair considered maintainability ideal would be one which did not require the use of external test equipment. It follows, then, that a maintenance task requiring test equipment would involve more task time for set-up and adjustment and should receive a lower maintenance evaluation score.

Scoring Criteria

a. To be scored when the maintenance action does not require the use of external test equipment. Applicable when the cause of the malfunction is easily detected by inspection or built-in test equipment.

b. To be scored when one piece of test equipment is required to complete the maintenance action. Sufficient information is available through the use of one piece of external test equipment for adequate repair of the malfunction.

c. To be scored when 2 or 3 pieces of external test equipment are required to complete the maintenance action. This type malfunction would be complex enough to require testing in a number of areas with different test equipments.

d. To be scored when four or more pieces of test equipment are required to complete the maintenance action. Involves an extensive testing requirement to locate the malfunction. This would indicate that a least maintainable condition exists.

Item No. 2 Connectors

Determines if supplementary test equipment requires special fittings, special tools, or adapters to perform adequately, tests on the electronic system or subsystem. During troubleshooting of electronic systems, the minimum need for test equipment adapters or connectors indicates that a better maintainable condition exists.

Scoring Criteria

a. To be scored when special fittings or adapters and special tools are not required for testing. This would apply to tests requiring regular test leads (probes or alligator clips) which can be plugged into or otherwise secured to the test equipment binding post.

b. Applies when one special fitting, adapter or tool is required for testing. An example would be if testing had to be accomplished using a 10 DB attenuator pad in series with the test set.

c. To be scored when more than one special fitting, adapter, or tool is required for testing. An example would be when testing requires the use of an adapter and an RF attenuator.

Item No. 3 Jigs or Fixtures

Determines if supplementary materials such as block and tackle, braces, dollies, ladders, etc., are required to complete the maintenance action. The use of such items during maintenance would indicate the performance of a major maintenance time and pin-point specific deficiencies in the design for maintainability.

Scoring Criteria

a. To be scored when no supplementary materials (block and tackle, braces, dollies, ladders, etc.) are required to complete maintenance. Applies when the maintenance action consists of normal testing and the removal or replacement of parts or components can be accomplished by hand, using standard tools.

b. To be scored when one supplementary item is required to complete maintenance. Applies when testing or when the removal and replacement of parts requires a step ladder for access or a dolly for transportation.

c. To be scored when more than one supplementary item is required to complete maintenance. Concerns the

maintenance action requiring a step ladder and dolly adequately to test and remove the replaced parts.

Item No. 4 Visual Contact

Determines if the nature of the equipment, location, or maintenance action causes the members of a team to be hidden from the view of each other at times during the task. (This does not apply when a technician leaves the maintenance area to get a piece of test equipment, tool, spare part, etc.)

Scoring Criteria

a. Applies when the team members are visible to each other during the entire maintenance action.

b. To be scored if one member of the team becomes hidden from view of other member or members once during the maintenance action.

c. Applicable if team members are hidden from view on more than one occasion.

Item No. 5 Assistance (Operations Personnel)

Determines whether or not information or assistance from operations personnel is required, and if required, to what extent.

Scoring Criteria

a. To be scored when the maintenance action does not require the assistance of operations personnel. This would apply if physical or verbal aid to the technical personnel was not required. (Less than one minute.)

b. To be scored when the maintenance action requires a small amount of assistance from operations personnel. (One to five minutes.)

c. To be scored when the maintenance action requires considerable assistance from operations personnel in the operation or repair of the malfunctioning equipment. (Over five minutes.)

Item No. 6 Assistance (Technical Personnel)

Determines the number of technical personnel required to complete the maintenance action, not including administrative or operations type personnel.

Scoring Criteria

a. To be scored when only one technician is required to complete the maintenance action.

b. To be scored when two technicians are required to complete the maintenance action.

c. To be scored when more than two technicians are required to complete the maintenance action.

Item No. 7 Assistance (Supervisors or Contractor Personnel)

Determines whether or not the services of supervisor or contractor personnel (TECH. REPS.) are required to complete the maintenance action and the extent of their participation in the task.

Scoring Criteria

a. To be scored when no supervisor or contractor personnel are consulted during the maintenance action. (Less than one minute.)

b. To be scored when a small amount of assistance from supervisor or contractor personnel is required to complete the maintenance action. (One to five minutes.)

c. To be scored when considerable assistance from supervisor or contractor personnel is required to complete the maintenance action. (Over five minutes.)

4. CHECKLIST C - SCORING DESIGN DICTATES-MAINTENANCE SKILLS

This checklist evaluates the personnel requirements relating to physical, mental, and attitude characteristics, as imposed by the maintenance task.

4.1 Discussion

Evaluation procedure for this checklist can best be explained by way of several examples. Consider first question 1, which deals with arm, leg, and back strength. Should a particular task require the removal of an equipment drawer weighing 100 pounds, this would impose a severe requirement on this characteristic. Hence, in this case the question would be given a low score (0 to 1). Assume another task which, due to small size and delicate construction, required extremely careful handling. Here question 1 would be given a high score (4), but question dealing with eye-hand coordination and dexterity would be given a low score.

Other questions in the checklist relate to various personnel characteristics important to maintenance task accomplishment. In completing the checklist, the task requirements for each of these characteristics should be viewed with respect to average technician capabilities.

4.2 Checklist C - Scoring Design Dictates-Maintenance Skills

		Score
1.	Arm, Leg, and Back Strength	___
2.	Endurance and Energy	___
3.	Eye-Hand Coordination, Manual Dexterity, and Neatness	___
4.	Visual Acuity	___
5.	Logical Analysis	___
6.	Memory - Things and Ideas	___
7.	Planfulness and Resourcefulness	___
8.	Alertness, Cautiousness, and Accuracy	___
9.	Concentration, Persistence, and Patience	___
10.	Initiative and Incisiveness	___

4.3 Checklist C Scoring Criteria

Quantitative evaluation of the checklist items ranges from 0 to 4 in accordance with the following criteria:

"4" The maintenance action requires a minimum effort on the part of the technician.

"3" The maintenance action requires a below average effort on the part of the technician.

"2" The maintenance action requires an average effort on the part of the technician.

"1" The maintenance action requires an above average effort on the part of the technician.

"0" The maintenance action requires a maximum effort on the part of the technician.

These criteria will be used in scoring the following specific divisions of physical, mental, and motor requirements. It should be noted that normal conditions are given a score of "2" and other scores are based on the relative deviation from normal or average.

Item No. 1 Arm, Leg, and Back Strength

Determines the degree of arm, leg, and back strength required to complete the maintenance action. Refers to any effort, no matter how minimal. Varying degrees of strength are required for various maintenance actions as related to equipment design.

Item No. 2 Endurance and Energy

Determines the degree of endurance and energy required to complete the maintenance action. Endurance might be referred to as the physical counterpart of patience, where a sustained physical effort is required. Energy required to complete the maintenance action when the task requires vigorous activity or exertion by the technician is also assessed. This applies to the necessity of lifting and carrying heavy assemblies, tools, or parts.

Item No. 3 Eye-Hand Coordination, Manual Dexterity, & Neatness

Determines the degree of eye-hand coordination required to complete the maintenance action. Refers to any act involving the use of the eyes while manipulating the hands to accomplish the same action. This type of action would be applicable mostly in testing and measuring activities; however, it is not inconceivable that this item would also be applicable in other areas of the maintenance action. Scoring shall be proportional to the degree or the intensity of the requirements of the task.

Determines the degree of manual dexterity required to complete the maintenance action. When the skillful use of the hands is required to accomplish the task, appropriate degrees of necessity shall be established. Those type actions involving manual dexterity would more naturally apply to the repair, assembly, or disassembly of equipments rather than the troubleshooting processes.

Also determines the degree of neatness required by the maintenance action. Applies specifically to the requirement of the actual repair where tidiness is of prime importance to accomplish the task adequately. Since equipment is designed and constructed in accordance with quality control specifications, it is important to consider the care which has to be exercised during a particular repair.

Item No. 4 Visual Acuity

Determines the degree of visual acuity required to complete the maintenance task. When the maintenance action is such that the visual accuracy of the technician is required to accomplish the task, a degree of requirement shall be established. Such actions shall include the need for accurate and precise visual activity in finding indications of trouble, faulty components, or the visual sensitivity sometimes necessary in reading certain oscilloscope presentations.

Item No. 5 Logical Analysis

Determines the degree of logical analysis required to complete the maintenance action. Refers to the need for involved logical analysis or for extensive mental reasoning to determine the origin of the fault or malfunction. If the problem is such that it requires orientation on the logical signal sequency, then this shall also be considered as part of this question.

Item No. 6 Memory - Things and Ideas

Determines the degree to which the maintenance action requires a knowledge of the equipment past history with reference to component or part failure, tools to be used, and sequences to be followed (assembly, disassembly, etc.).

Also determines the degree to which the maintenance action requires a previous knowledge of the equipment. Refers to the degree that the task requires recall of concepts or principals of operation, function and operation of circuits and parts, or electronic theory and maintenance procedures.

Item No. 7 Planfulness and Resourcefulness

Determines the degree of planning required to complete the maintenance action successfully. Refers to the extent to which the task requires a planned and methodological approach to assure rapid diagnosis and repair of the equipment fault or malfunction.

Also determines the degree of resourcefulness required to complete the maintenance action. Refers to the capabilities necessary in dealing with a situation or in meeting difficulties pertaining to the diagnosis and repair of the equipment. Conditions sometimes exist where certain needed materials such as tools, test equipment, or technical publications are not available, although substitution is possible, by some improvised method, to accomplish the task adequately.

Item No. 8 Alertness, Cautiousness and Accuracy

Alertness is a readiness or promptness in comprehending and a keen awareness and knowledge of all events or factors affecting the maintenance action. Cautiousness is the exercise of forethought so that risks may be avoided or minimized during the maintenance action. (A survey of all possible consequences before making a decision.) Accuracy is attained by the exercise of care by showing close attention to the details of the maintenance task and cautiousness in avoiding errors. The design requirements for these characteristics are to be assessed.

Item No. 9 Concentration, Persistence, and Patience

Concentration is the close mental application or exclusive attention to the maintenance task and the direct focusing of the mind upon one thing to the exclusion of everything else. Persistence refers to maintenance task with the implication of being able to carry performance to a successful conclusion. Patience is the quiet perseverance, calmness in working, and being undisturbed by obstacles, delays, or failures which might occur during the maintenance task.

Item No. 10 Initiative and Incisiveness

Initiative is the energy of aptitude displayed in the initiation of action and the ability or power to introduce a new measure or course of action. Incisiveness in the keenness of mind and acuteness of understanding the task at hand.

APPENDIX II

MAINTAINABILITY PREDICTION TRAINING COURSE

SESSION I - INTRODUCTION TO MAINTAINABILITY

A. Historic Development

1. Reasons for Consideration
   - a. Equipment unavailability
   - b. High support costs

2. Facets of Maintainability
   - a. Specification
   - b. Control
   - c. Prediction
   - d. Testing
   - e. Field reporting

3. Research Accomplished
   - a. Federal Electric
   - b. Republic Aviation
   - c. Convair
   - d. American Institute for Research
   - e. ARINC
   - f. HRB Singer
   - g. Northrup
   - h. RCA

4. Present Emphasis
   - a. Procurement on total cost basis
   - b. Quantitative contractural requirements (26512C)
   - c. WSEIAC

B. Relation to Other Requirements

1. Availability - System Effectiveness
   - a. Reliability
   - b. Supportability

2. Cost - Effectiveness
   - a. Support costs
   - b. Operational readiness

C. Maintenance Processes

1. Man - machine relation

2. Task ingredients

3. Task elements

4. Maintenance classification

D. Maintainability Measurement Parameters

1. Design

2. Personnel

3. Support

E. Maintainability Indices

1. Time Related

   a. Down time
   b. Technician time
   c. Task frequency
   d. Repairability
   e. Availability

2. Cost Related

   a. Support equipment cost
   b. Supply cost
   c. Technician cost

SESSION II - DEVELOPMENT AND VALIDATION OF PREDICTION TECHNIQUE

A. Research Plan

1. Maintenance time as a function of D, P, & S

2. Time study and checklist approach to gather data

3. Use of regression analysis to determine relation

4. Laboratory studies to investigate various facets of maintenance

B. Field and Laboratory Study

1. Equipment observed and site locations

2. Data collection procedures

3. FST-2 Labs

4. GKA-5 Lab

5. FPS-20 Lab

C. Formulation of Technique

1. Data Reduction

2. Mathematical analysis

3. Technique development

D. Technique Validation

1. Trial predictions (FPS-6 & GRR-7/GRC-9)

2. Field data collection

3. Mathematical analysis

E. Application to Airborne Field Environment

1. Adaption of technique

2. Prediction training

3. Trial predictions

4. Comparison with field data

SESSION III - APPLICATION OF PREDICTION TECHNIQUE

A. Information Necessary

1. Theory of operation

2. Schematic diagrams

3. Mechanical design details

4. Maintenance environment

5. Reliability data

B. Steps to Prediction

1. Select task sample

2. Perform maintenance analysis

3. Score tasks

4. Calculate indices

C. Selection of Sample

1. Determine sample size

2. Determine part/module failure distribution

3. Randomly select tasks

SESSION IV - APPLICATION OF PREDICTION TECHNIQUE (CONT.)

A. Maintenance Analysis

1. Maintenance diagraming

2. Diagnostic procedures

3. Scoring comments

B. Maintenance Diagraming

1. Functional block diagram

2. Logic diagram

3. Cookbook procedures

C. Diagnostic Procedures

1. Half-split

2. Middle to trouble

3. Input to output

4. Output to input

5. Random

D. Scoring Comments

1. Test results

2. Access problem

3. Tool and test equipment requirements

4. Adjustments

5. Special features affecting maintenance

SESSION V - APPLICATION OF PREDICTION TECHNIQUE (CONT.)

A. Maintenance Analysis Practice

1. Practice analysis of AN/GRR-7 task

2. Review of task analysis

SESSION VI - APPLICATION OF PREDICTION TECHNIQUE (CONT.)

A. Task Scoring Procedure

1. Checklist A

2. Checklist B

3. Checklist C

4. Downtime calculation

B. Scoring Physical Design

1. General intent

2. Question scoring criteria

SESSION VII - APPLICATION OF PREDICTION TECHNIQUE (CONT.)

A. Scoring Design Requirements for Facilities

1. General intent

2. Question scoring criteria

B. Scoring Design Requirements for Maintenance Skills

1. General intent

2. Question scoring criteria

SESSION VII - APPLICATION OF PREDICTION TECHNIQUE (CONT.)

A. Task Scoring Practice

1. Score AN/GRR-7 task

2. Calculate expected downtime

3. Review scoring

SESSION IX - APPLICATION OF PREDICTION TECHNIQUE (CONT.)

A. Practice Prediction of a Different GRR-7 Task

1. Maintenance analysis
2. Task scoring
3. Downtime calculation
4. Review task prediction

SESSION X - CRITIQUE AND REVIEW

A. Calculation of Maintenance Indices

1. Mean downtime
2. Maximum downtime
3. Confidence limits

B. Review of Prediction Procedure

1. Sample selection
2. Maintenance analysis
3. Task scoring

C. Future Development

1. Application to other levels of maintenance
   a. Airborne organizational
   b. Depot
2. Application to other types of equipment
   a. Mechanical
   b. Pneumatic
   c. Hydraulic
3. Application to other environments
   a. Missiles
   b. Space vehicles
4. Application to new design concepts
   a. Micro-modular
   b. Solid state

5. Technique Improvement
   a. Expanded checklists
   b. More data
   c. Measurement of personnel parameter

APPENDIX III

AN/APX-46 MAINTAINABILITY EVALUATION PLAN

1. INTRODUCTION

This plan illustrates the requirements and suggested procedures for acquiring data necessary for validating the RADC-RCA maintainability prediction technique. The proposed evaluation would be accomplished by performing a sample of simulated corrective maintenance tasks at an actual field maintenance ship installation. The equipment is made to fail by inserting defective parts, and the time for an Air Force maintenance technician to diagnose the problem and effect a repair is measured. The resulting maintenance time for the sample tasks performed by a number of technicians can then be used to calculate equipment maintainability indices. This plan was developed for implementation by the Air Training Command MTU unit at a field installation. Included in the plan are the experimental environment, administration procedures, and data requirements.

2. ENVIRONMENT

The evaluation should be performed at a field maintenance shop facility normally used for AN/APX-46 maintenance. The tools and test equipment provided for the APX-46 should be used and should be stored in their normal locations. The Technical Orders and maintenance instructions that are supplied for the equipment at each installation should be used for technical information. The normal supply system should be used for acquiring spare parts and materials or it should be simulated as accurately as possible (including distance). In general the conditions that would normally be encountered by a technician performing shop maintenance on this equipment should be simulated as closely as possible.

3. ADMINISTRATIVE PROCEDURES

The general procedure is to insert a faulty part or circuit board into the equipment and have a technician determine the cause of failure, and repair the equipment while being timed by an observer. The tasks to be used are those selected for equipment maintainability prediction. Each task should be pre-tested prior to the actual evaluation to determine the malfunction symptoms and to assure that the method for simulating the failure is satisfactory. (Where the failed parts are mounted on circuit boards, any alteration to the board that will cause the desired malfunction symptoms is acceptable.) The lowest replaceable unit for each task will be circuit boards where used, and parts in the remaining portions of the circuitry.

Each task is administered by first determining that the equipment is operating normally and then inserting the faulty part or circuit board. The equipment should then be checked to determine if it exhibits the correct malfunction symptoms (determined by pre-testing), disconnected, and placed in the position where a faulty unit is normally encountered in an actual maintenance situation. A maintenance technician is then called to perform the necessary corrective action and the time to perform the task is measured. The timing commences when the technician first touches the equipment and terminates when the proper repair action has been performed and the equipment disconnected. (The observer should verify that the equipment has been returned to normal operating condition before allowing the technician to disconnect the equipment.) If a failure, not related to the task, occurs during the performance of the task, the task should be discontinued and repeated at a later time. Each of the selected tasks are performed in this manner by each of the technicians selected for the evaluation. (The tasks should be presented in a different randomly selected order to each of the technicians.)

4. EVALUATION DATA

Two types of data are required, corrective maintenance task times, and the technician biographical data. The time data is acquired by recording the times to perform each of the sample tasks by each of the technicians. A suggested method for recording time data is to start a stop watch running at the beginning of a task and record each time that the technician completes a particular operation and a description of the operation on a form similar to that illustrated in Figure 7. The completion time is also noted and the active down time is calculated by subtracting the nonproductive time periods from the total elapsed time. (Nonproductive time includes interruptions or conversations not associated with the task, and time required for the observer to check that the equipment has been repaired correctly.)

Biographical data relating to electronic schooling and maintenance experience should be recorded for each technician used in the evaluation. A suggested form for recording the pertinent data is illustrated in Figure 8, this form provides space for all the desired biographical data. In addition to the time and biographical data, a short description of the actual evaluation together with pertinent comments and problems encountered should be provided.

MAINTENANCE WORKSHEET

Equip. _____ Task No. _____ Date _____

Subject No. _____ Observer _____

Time (Minutes)	Operation
00.0	Start
01.5	Checked output meter
03.5	Removed dust cover
07.2	Secured and adjusted scope
10.8	Task scope reading
12.5	Replaced tube (V101)
14.0	Took scope reading
16.2	Made adjustment
17.8	Checked output meter
19.2	Replaced cover
21.5	Checked meter
23.0	Task complete

FIGURE 7. MAINTENANCE WORKSHEET

FIGURE 8

BIOGRAPHICAL DATA SHEET

1. Name_____ Subject No._____

2. Pay Grade_____ 3. Skill Level_____

4. Age_____ 5. Years in Service_____

6. Service Schools

Course_____

_____

_____

7. Maintenance Experience

Equipment AN/APX-46 Time_____

_____ _____

_____ _____

_____ _____

_____ _____

8. Civilian School (circle highest level completed)

Grade School 1 2 3 4 5 6 7 8

High School 1 2 3 4

College 1 2 3 4 5 Degree _____

Major Fields _____ _____

9. Related Civilian Experience

Type of Work and/or Schools Time

_____ _____

_____ _____

_____ _____

REFERENCES

1. "Maintainability Techniques Study (Final Report)," Contract AF 30(602)-2057, RCA Service Company, A Division of Radio Corporation of America, RADC TDR-63-85, Vol. I, DDC No. AD 404899, Cherry Hill, N. J., 5 February 1963.

2. "Maintainability Engineering," Contract AF30(602)-2057, RCA Service Company, A Division of Radio Corporation of America, RADC TDR-63-85, Vol. II, DDC No. AD404898, 5 February 1963.

3. "Maintainability Prediction Technique (Phase IV Report)," Contract AF30(602)-2057, RCA Service Co., A Division of Radio Corporation of America, RADC-TDE-62-156, DDC No. AD 227199, 15 March 1962.

4. Field Maintenance Instructions, Transponder Set AN/APX-46, Air Force Technical Publication, T.O. 12P4-2APX46-2.

5. Sidney Siegel, Nonparametric Statistics for the Behavioral Sciences, McGraw-Hill Book Company, Incorporated, 1st Edition, New York, 1956.

6. C. H. Goulden, Methods of Statistical Analysis, John Wiley and Sons, Incorporated, 2nd Edition, New York, 1962.

UNCLASSIFIED
Security Classification

DOCUMENT CONTROL DATA - R&D
(Security classification of title, body of abstract and indexing annotation must be entered when the overall report is classified)

1. ORIGINATING ACTIVITY *(Corporate author)*
Radio Corporation of America, Camden, New Jersey and Aerospace Medical Research Laboratories,* Wright-Patterson Air Force Base, Ohio

2a. REPORT SECURITY CLASSIFICATION
UNCLASSIFIED

2b. GROUP
N/A

3. REPORT TITLE
THE VALIDATION OF A MAINTAINABILITY PREDICTION TECHNIQUE FOR AN AIRBORNE ELECTRONIC SYSTEM

4. DESCRIPTIVE NOTES *(Type of report and inclusive dates)*
Final report, January 1964 - September 1964

5. AUTHOR(S) *(Last name, first name, initial)*
Retterer, B. L. McLaughlin, R. L.
Griswold, G. H. *Topmiller, Donald A., PhD

6. REPORT DATE
May 1965

7a. TOTAL NO OF PAGES
66

7b. NO. OF REFS
6

8a. CONTRACT OR GRANT NO. AF 33(615)-1338

b. PROJECT NO 7184

c. Task No. 718406

d.

9a. ORIGINATOR'S REPORT NUMBER(S)

9b. OTHER REPORT NO(S) *(Any other numbers that may be assigned this report)*
AMRL-TR-65-42

10. AVAILABILITY/LIMITATION NOTICES
Qualified requesters may obtain copies of this report from DDC.
Available, for sale to the public, from the Clearinghouse for Federal Scientific and Technical Information, CFSTI (formerly OTS), Sills Bldg, Springfield, Virginia 22151.

11. SUPPLEMENTARY NOTES

12. SPONSORING MILITARY ACTIVITY
Aerospace Medical Research Laboratories, Aerospace Medical Division, Air Force Systems Command, Wright-Patterson AFB, Ohio

13. ABSTRACT A technique for predicting the maintainability, at the field maintenance level, of airborne electronic equipment was investigated. In the technique, which was based on one previously developed for ground electronic systems, design features, skill requirements, facilities and the maintenance environment are used to predict maintenance times. Predictions of elemental task-times involved in maintaining the AN/APX-46 airborne IFF were computed from ratings made independently by Air Force and contractor (RCA) personnel. These predictions were compared with each other and with data collected under field conditions in which malfunctions were artificially introduced. The two independent predictions of overall down time were in close agreement with each other, however, there was little agreement between the elemental task-time predictions. Although the field-condition data were limited, the analyses suggest that the prediction equation would tend to overestimate actual times. On the basis of this study it cannot be concluded that the technique, as used, accurately predicts maintenance down-time of airborne electronic equipment. However, it appears that portions of the technique could be used to evaluate the relative maintainability of alternative designs. Suggestions for modifying the techniques and for improving the predictions are presented.

DD FORM 1 JAN 64 1473
AF-WP-B-AUG 64 400

UNCLASSIFIED
Security Classification

14. KEY WORDS	LINK A ROLE	LINK A WT	LINK B ROLE	LINK B WT	LINK C ROLE	LINK C WT
Human engineering						
Air Force equipment						
Aircraft equipment						
Maintenance						
Maintenance equipment						
Maintenance personnel						

INSTRUCTIONS

1. ORIGINATING ACTIVITY: Enter the name and address of the contractor, subcontractor, grantee, Department of Defense activity or other organization *(corporate author)* issuing the report.

2*a*. REPORT SECURITY CLASSIFICATION: Enter the overall security classification of the report. Indicate whether "Restricted Data" is included. Marking is to be in accordance with appropriate security regulations.

2*b*. GROUP: Automatic downgrading is specified in DoD Directive 5200.10 and Armed Forces Industrial Manual. Enter the group number. Also, when applicable, show that optional markings have been used for Group 3 and Group 4 as authorized.

3. REPORT TITLE: Enter the complete report title in all capital letters. Titles in all cases should be unclassified. If a meaningful title cannot be selected without classification, show title classification in all capitals in parenthesis immediately following the title.

4. DESCRIPTIVE NOTES: If appropriate, enter the type of report, e.g., interim, progress, summary, annual, or final. Give the inclusive dates when a specific reporting period is covered.

5. AUTHOR(S): Enter the name(s) of author(s) as shown on or in the report. Enter last name, first name, middle initial. If military, show rank and branch of service. The name of the principal author is an absolute minimum requirement.

6. REPORT DATE: Enter the date of the report as day, month, year; or month, year. If more than one date appears on the report, use date of publication.

7*a*. TOTAL NUMBER OF PAGES: The total page count should follow normal pagination procedures, i.e., enter the number of pages containing information.

7*b*. NUMBER OF REFERENCES: Enter the total number of references cited in the report.

8*a*. CONTRACT OR GRANT NUMBER: If appropriate, enter the applicable number of the contract or grant under which the report was written.

8*b*, 8*c*, & 8*d*. PROJECT NUMBER: Enter the appropriate military department identification, such as project number, subproject number, system numbers, task number, etc.

9*a*. ORIGINATOR'S REPORT NUMBER(S): Enter the official report number by which the document will be identified and controlled by the originating activity. This number must be unique to this report.

9*b*. OTHER REPORT NUMBER(S): If the report has been assigned any other report numbers *(either by the originator or by the sponsor)*, also enter this number(s).

10. AVAILABILITY/LIMITATION NOTICES: Enter any limitations on further dissemination of the report, other than those imposed by security classification, using standard statements such as:

(1) "Qualified requesters may obtain copies of this report from DDC."

(2) "Foreign announcement and dissemination of this report by DDC is not authorized."

(3) "U. S. Government agencies may obtain copies of this report directly from DDC. Other qualified DDC users shall request through _____."

(4) "U. S. military agencies may obtain copies of this report directly from DDC. Other qualified users shall request through _____."

(5) "All distribution of this report is controlled. Qualified DDC users shall request through _____."

If the report has been furnished to the Office of Technical Services, Department of Commerce, for sale to the public, indicate this fact and enter the price, if known.

11. SUPPLEMENTARY NOTES: Use for additional explanatory notes.

12. SPONSORING MILITARY ACTIVITY: Enter the name of the departmental project office or laboratory sponsoring *(paying for)* the research and development. Include address.

13. ABSTRACT: Enter an abstract giving a brief and factual summary of the document indicative of the report, even though it may also appear elsewhere in the body of the technical report. If additional space is required, a continuation sheet shall be attached.

It is highly desirable that the abstract of classified reports be unclassified. Each paragraph of the abstract shall end with an indication of the military security classification of the information in the paragraph, represented as *(TS)*, *(S)*, *(C)*, or *(U)*.

There is no limitation on the length of the abstract. However, the suggested length is from 150 to 225 words.

14. KEY WORDS: Key words are technically meaningful terms or short phrases that characterize a report and may be used as index entries for cataloging the report. Key words must be selected so that no security classification is required. Identifiers, such as equipment model designation, trade name, military project code name, geographic location, may be used as key words but will be followed by an indication of technical context. The assignment of links, rules, and weights is optional.