Contrails

WADC TECHNICAL REPORT 53-162
PART 2

ELECTRODEPOSITION OF TITANIUM

ALBERT W. SCHLECHTEN
MARTIN E. STRAUMANIS
C. BURROUGHS GILL

MISSOURI SCHOOL OF MINES AND METALLURGY

NOVEMBER 1954

MATERIALS LABORATORY
CONTRACT No. AF 33(616)-75
PROJECT No. 7312
TASK No. 73120

WRIGHT AIR DEVELOPMENT CENTER
AIR RESEARCH AND DEVELOPMENT COMMAND
UNITED STATES AIR FORCE
WRIGHT-PATTERSON AIR FORCE BASE, OHIO

Carpenter Litho & Prtg. Co., Springfield, O.
200 - 15 March 1955

Approved for Public Release

Contrails

FOREWORD

This report was prepared by the Missouri School of Mines and Metallurgy under USAF Contract No. AF 33(616)-75. The contract was initiated under Project No. 7312, Finishes and Materials Preservation, Task No. 73120, Electrodeposition and Electrochemical Treatments, formerly RDO No. 619-11 (HA), and was administered under the direction of the Materials Laboratory, Directorate of Research, Wright Air Development Center, with Mr. O. O. Srp acting as project engineer.

Approved for Public Release

Contrails

ABSTRACT

A process has been developed for obtaining a diffusion coating of titanium on iron, mild steel, copper, and other metals. This coating is very high in titanium content and displays good corrosion resistance. Many of the variables in the process have been investigated and are reported. Data are also presented on the corrosion of titanium in fused salts, the resulting products, and the probable mechanism.

PUBLICATION REVIEW

This report has been reviewed and is approved.

FOR THE COMMANDER:

M. R. WHITMORE
Technical Director
Materials Laboratory
Directorate of Research

GALVIN LIBRARY
ILLINOIS INSTITUTE OF TECHNOLOGY
JAN 26 2006
GOVERNMENT DOCUMENTS
DEPOSITORY #0146-A

Approved for Public Release

Contrails

TABLE OF CONTENTS

	Page
INTRODUCTION	1
SECTION I - DIFFUSION COATINGS OF TITANIUM	2
Introduction	2
Previous Work on Titanium Diffusion Coatings	2
Background of M.S.M. Titanizing Process	4
Experimental Procedure	5
Metals That Can be Coated	7
Arrangement of the Titanium Source and Object to be Plated	7
Stirring and Ultrasonic Agitation of the Bath	8
Composition of the Salt Bath	10
Composition of the Titanium Source	12
Relation of Bath Temperature to Coating Thickness	12
Relation of Time of Treatment to Coating Thickness	13
Composition of Titanium Diffusion Coatings on Iron	15
Effect of Carbon in Steel Upon Titanium Diffusion Coatings	19
Deterioration of Coating Bath and Use of Protective Atmosphere	24
Conclusions	25
SECTION II - CORROSION OF TITANIUM IN FUSED SALTS AND IDENTIFICATION OF PRODUCTS	26
Introduction	26
Experimental Procedure	26
Analysis of the Corrosion Products	27
Weight Loss of Titanium in Fused NaCl versus Time and Temperature	28
Amount and Composition of Black Residue	28
Amount and Composition of the Gray Residue and Yellow White Residue	30
Influence of Alternating Current on Corrosion of Titanium in Fused Salts	31
Discussion	32
Conclusions	33
SECTION III - ELECTROCHEMICAL BEHAVIOR OF A TITANIUM-FUSED SALT-PLATINUM CELL	35
Introduction	35
Experimental Procedure	36
The Electromotive Force of the Cell in Air	39
The Electromotive Force of the Cell in Vacuum	40
The Current Produced by the Cell	40
Influence of Various Gases on Current Produced	42
Discussion	45
Conclusions	46

Approved for Public Release

TABLE OF CONTENTS (CONT'D)

	Page
SECTION IV - HYDROGEN OVERVOLTAGE ON TITANIUM	48
Introduction	48
Conclusions from all Experiments on the Hydrogen Overvoltage on Titanium	48
BIBLIOGRAPHY	50

Approved for Public Release

Contrails

LIST OF ILLUSTRATIONS

		Page
FIGURE 1.	Thickness of Titanium Diffusion Coatings on Iron Versus Temperature	14
FIGURE 2.	Thickness of Titanium Diffusion Coatings on Iron Versus Deposition Time	16
FIGURE 3.	Titanium and Iron Contents of Titanium Coatings on Iron Versus Coating Time	17
FIGURE 4.	Titanium and Iron Contents of Titanium Coatings on Iron Versus Temperature	18
FIGURE 5.	Weight of Titanium Deposited on Steel Versus Carbon Content	21
FIGURE 6.	Titanium Diffusion Coating on Ingot Iron	22
FIGURE 7.	Titanium Diffusion Coating on 0.18 Percent Carbon Steel	22
FIGURE 8.	Arrangement of the Ti/Salt/Pt Cell for emf and Current Measurements	37
FIGURE 9.	Arrangements of the Ti/Fused Salt/Pt Cell for emf and Current Measurements Under a Protective Atmosphere	38

Approved for Public Release

Contrails

ELECTRODEPOSITION OF TITANIUM

INTRODUCTION

Our annual report of one year ago, dated July 1953, briefly reviewed the desirability of developing a process for depositing protective coatings of titanium on other metals. Attempts to electrodeposit such coatings from aqueous or organic electrolytes have met with little or no success as far as is known. Electrodeposition from fused salts is possible, but it is not a simple task, because the major part of the cathode product tends to be in the form of powder or dendrites and only a relatively thin layer adheres to the cathode. Furthermore, the successful electrolytic deposition of titanium requires most careful purification of the salts for the bath and the use of a cell which can be operated under a protective atmosphere.

This report describes a relatively simple procedure for obtaining a diffusion coating of titanium on other metals. As far as can be determined from a literature search, the process is new, and a patent application has been filed. The coatings obtained are coherent, free from pits, and effectively protect the bare metal from corrosion. The factors affecting the deposition are described in detail in the report.

Approved for Public Release

Contrails

SECTION I

DIFFUSION COATINGS OF TITANIUM

(I-1) Introduction

Processes in which one metal is diffused into another are widely used to obtain coatings that are corrosion resistant. Low melting point metals can be applied by hot dipping, but high melting point metals require other methods, such as those used for siliconizing or chromizing.

Diffusion coatings have some advantages over electrodeposited coatings in that they are more adherent and not as likely to spall at elevated temperatures. Furthermore, they are often more free of holes and defects and hence more resistant to corrosion.

For these reasons, chromizing by diffusion is used commercially in England and Germany to apply protective coatings to a variety of objects. The coating is obtained either by cementation with chromium metal powder, by immersion in salt baths containing chromous chloride, or by bringing a chromium halide vapor in contact with the surface to be plated. A considerable amount of research has been done on chromizing, and the results are of value in predicting the feasibility of titanium diffusion coatings.

(I-2) Previous Work on Titanium Diffusion Coatings

Very few references can be found in the literature to titanium diffusion coatings. Laissus (1) in 1927 used a cementation tech-

Approved for Public Release

nique in which iron and steel specimens were imbedded in ferro-titanium powder and heated at temperatures from 800° to 1100°C for times of 2.5 to 10 hours. The ferro-titanium powder contained 33% Ti and 8.37% C; although definite coatings were obtained, particularly on the electrolytic iron, the author found that the resistance to attack was only slightly better than that of the uncoated iron.

T. Kase (2) in 1936 used a similar method of heating iron samples in powdered ferro-titanium at temperatures as high as 1300°C. He reported that the cemented surfaces became harder, but no more corrosion resistant.

Cornelius and Bollenrath (3) studied the diffusion of titanium into steels and reported the effect of the carbon content of the steel on the diffusion process. However, they did not test the corrosion resistance of the cemented surfaces.

Alexander (4) and later, Chapin and Hayward (5) have described a process of coating steels with a copper-titanium alloy ranging from 5% to 37.5% Ti. These coatings were resistant to 10% NaCl solutions, but presumably not to nitric acid.

Travers (6) found that iron cannot be coated by contact with $TiCl_4$ vapors even at 1400°C. If carefully purified hydrogen was also added with the $TiCl_4$, a blackish gray coating was obtained on the iron. This coating slightly retarded the corrosion of the iron.

S. Kowal (7) heated mild steel specimens at a temperature

Approved for Public Release

Contrails

880°C in a fused mixture of sodium carbonate and titanium dioxide. He obtained a white layer on the steel which he estimated as containing 5 percent Ti, although x-ray diffraction revealed no titanium or titanium compound.

It would appear that none of the procedures cited in the literature yielded a coating of sufficiently high titanium content to obtain the excellent corrosion resistance of titanium metal.

(I-3) Background of M.S.M. Titanizing Process

The process described in this paper was the outgrowth of previous experiments on corrosion (8) which showed that titanium is severely attacked when immersed in molten chlorides or fluorides exposed to air. The corrosion products, particularly in chloride baths, are to a great extent finely divided titanium and resemble the "metal fogs" or "pyrosols" described by Lorenz and Eitel (9). It was observed that the walls of the porcelain crucibles used for the corrosion tests were covered below the salt level with a layer which was largely titanium. A series of tests were made to determine if such coatings could be obtained on other surfaces.

As a result of these experiments, it was discovered that objects of copper, iron, or other metals, immersed in the salt bath where there was a high concentration of the titanium pyrosol, were covered with a coating of high titanium content.

In order to achieve the necessary high pyrosol concentration, the object to be plated was placed in close proximity to the ti-

Approved for Public Release

Contrails

titanium source which was corroding, but preferably not in contact with it. Thus, flat surfaces could be plated by placing them parallel to sheets of titanium, and irregular objects could be imbedded in titanium powder or cuttings, although this second method tended to give a rougher coating because of some direct cementation.

The resulting coatings formed a coherent layer that protected the underlying metal from corrosion. For example, copper and iron objects coated by this process were immersed in nitric acid solutions with no evidence of attack.

Experiments are described which demonstrate the variation of the coating process with time and temperature of treatment, composition of bath, and other factors.

(I-4) Experimental Procedure

Small disks of copper or iron about 2 cm. in diameter and 1 mm. thick were fastened parallel to pieces of titanium sheet which were slightly larger in diameter; pieces of 0.5 mm. wire were used as spacers between the two metals. The assemblage was placed in a porcelain crucible containing molten salt and heated in a resistance muffle furnace for several hours at a temperature above the melting point of the salt. After the desired heating period, the crucible was removed from the furnace, allowed to cool, and placed in a beaker of water which was heated to digest the salt. In some experiments the salt was melted after the ob-

Approved for Public Release

Contrails

ject to be plated and the titanium source were placed in the crucible. In other experiments, the assemblage was removed from the molten salt as soon as the crucible was taken from the furnace; there was enough salt adhering to the plated object to prevent any appreciable oxidation of the titanium coating. These variations in procedure had no detectable influence on the results.

After the salt had been dissolved, it was necessary to rub or brush away the dark corrosion residue to expose the metallic titanium coating on the disk.

The weight of the coating was calculated from the increase of weight of the plated disk, or better yet, by dissolving the iron or copper away from the coating, which could then be weighed. The average thickness of the coating was calculated from the weight and density of titanium, and was checked by measuring a cross-section under the microscope.

A second method was to plate objects by imbedding them in titanium powder or cuttings on the bottom of the crucible, filling up the crucible with salt, and proceeding as before; this was better for irregular objects than the first method. Titanium hydride powder was also successfully used in the same way as a source of the titanium pyrosol. Powdered ferro-titanium was tried, but did not give a coating.

A variation of the second method was to make a uniform mixture of titanium powder and salt which was packed around the object.

Approved for Public Release

Contrails

A variety of salts were tried for the fused bath; and a number of addition agents to regular NaCl or KCl baths were tested. The effect of time and temperature were investigated, as well as the influence of stirring the bath, or applying an external emf.

(I-5) Metals That Can be Coated

Copper, iron, and low carbon steel, objects were plated in most of the experiments, but it was found that nickel, cobalt, and nickel-copper alloys were also readily coated with a titanium layer. Medium and high carbon steels, as well as cast iron, were coated only with difficulty and a relatively thin and patchy titanium layer was observed. In a later section quantitative data are given for the relationship of the coating thickness and the carbon content of the base metal. Aluminum could not be coated, because it was badly corroded in the molten chloride bath.

(I-6) Arrangement of the Titanium Source and Object to be Plated

Flat surfaces to be plated were placed as close as possible to the titanium sheet serving as a source without actually having them touch; usually a 0.5 to 1 mm. diameter wire was used as a spacer. It is not desirable to have the object and the titanium touch, because at the points of contact actual cementation occurs, and when the metals are separated the desired coating may be broken at these points.

If titanium powder is packed around the object to be plated,

Approved for Public Release

Contrails

some small particles of titanium will be cemented into the coating, which will then be rougher than the coating obtained wholly from the pyrosol. Coarse cuttings of titanium, such as come from a hacksaw, will give better coatings than powder, because the cuttings will not stick to the plated surface as readily, and seem to allow freer circulation of the pyrosol-bearing molten electrolyte.

On the theory that plating from the pyrosol is most desirable method, a piece of titanium metal was heated in a mixture of NaCl and KCl at 850°C for four hours. The severely corroded metal was then removed leaving the corrosion products, much of which was the black pyrosol, in the salt in the crucible. Next, a piece of copper was placed in the mixture in the crucible and heated. A very thin and patchy coating was obtained on the copper indicating that the effectiveness of the pyrosol degenerates rapidly if the bath is exposed to the atmosphere.

(I-7) Stirring and Ultrasonic Agitation of the Bath

In an attempt to plate irregular objects and to get smoother coatings, several experiments were made in which first a piece of titanium acting as a source was slowly revolved in the bath with the object to be coated held stationary; next the object was revolved with the titanium stationary; finally they were both revolved. Only fragmentary coatings were obtained, which demonstrated that dispersal of the pyrosol by stirring so as to reduce

Approved for Public Release

Contrails

its concentration was undesirable.

As mentioned before, coatings obtained from titanium powder are rough, so it was thought that stirring or agitation would be beneficial. However, as the titanium powder partially sinters and agglomerates in the salt bath, all attempts at stirring, agitation, or tumbling of a closed container were failures. The powder and the object all moved together as one piece.

Finally a number of experiments were made with ultrasonic agitation using a Mullard Ultrasonic Soldering Iron, Type E.7587 coupled to a Mullard Power Unit Type E.7595M. An aluminum sleeve was machined to fit the soldering iron tip and to hold a 1/4 inch diameter rod extending vertically downward into the furnace and into the crucible holding the bath. It is realized that this probably was an inefficient method of introducing vibrations into the bath and a more effective arrangement is now being assembled.

In the first ultrasonic agitation experiments the object and a piece of titanium sheet, the two separated by a spacer, were bolted to a rod extending from the ultrasonic soldering iron. They were immersed in a fused salt and the ultrasonic agitation was maintained for the entire plating time. The results indicated in a qualitative way that the agitation was helpful.

Another series of tests were made to obtain quantitative data. The procedure was to imbed a copper sample in a mixture of titanium powder and salt contained in a porcelain crucible, heated in a pot furnace. When the bath was fluid, the lower tip of the

Approved for Public Release

Contrails

rod attached to the ultrasonic soldering iron was dipped into the bath just above the sample.

To check on the benefits of agitation a second similar crucible and contents were heated at the same time in the same furnace. However vibrations were probably conducted through the furnace to this crucible, so a third similar sample was run at a later time under the same conditions but with no agitation.

The conditions and the results of the experiments are shown in Table 1.

The results indicate a beneficial effect, so further experiments will be made using a larger ultrasonic device and more effective coupling.

(I-8) Composition of the Salt Bath

NaCl, KCl, LiCl, and mixtures of all proportions appear to be equally effective as measured by the thickness of coating obtained. Eutectic mixtures of NaCl and KCl had the advantage of a lower melting point. The still lower melting mixtures (around 400°C) using LiCl were not warranted, because no coating could be obtained at such low temperatures.

Thin unsatisfactory coatings were obtained in K_2TiF_6, NaOH, and KOH. No coatings were obtained in NaCN, KCN, or a variety of sulfates.

A number of experiments were made in which NaI, KI, NaBr, KBr, K_2TiF_6, or NaF, were added in amounts varying from 1 to 15

Approved for Public Release

Contrails

TABLE 1

Titanium Coatings on Copper With and Without Ultrasonic Agitation

Salt Bath Mixture	Time (hours)	Temp. °C	Ultrasonic Agitation	Wt. Increase (grams)	Wt. Increase %	Coating
5% Ti powder + 95% KCl	3/4	850	in bath	.0126	.41	good
5% Ti powder + 95% KCl	3/4	850	in furnace	.0084	.27	good
5% Ti powder + 95% KCl	3/4	850	none	.0065	.21	good
6% Ti powder + 94% KCl	3/4	850	in bath	.0153	.49	good
4% Ti powder + 96% KCl	3/4	850	in bath	.0112	.37	good
5% Ti pdr. + Eut. Mix. LiCl-KCl	3/4	700	in bath	.0035 (loss)	.115 (loss)	some
5% Ti pdr. + Eut. Mix. NaCk-$NaCl_2$	3/4	800	in bath	.0019	.06	poor
5% Ti pdr. + Eut. Mix. NaCl-KCl	3/4	750	in bath	.0037	.12	good

Approved for Public Release

percent to NaCl or KCl baths. It was thought that these additions would hasten the corrosion of the titanium source and hence increase the rate of plating. None of the additions were beneficial; the plating obtained with these additions was less than that with baths of only NaCl, KCl, or a mixture of the two. It is evident that for plating purposes it is not only the amount but the nature of the titanium corrosion products that must be considered.

(I-9) Composition of the Titanium Source

For the majority of the experiments described, titanium of commercial purity was used as the source in the form of sheet, plate, powder or cuttings. No difference was noted in the coating obtained from these various materials.

In a few experiments titanium hydride powder was used in place of regular titanium powder; no particular advantage or disadvantage could be observed.

Tests with a low carbon and a high carbon ferro-titanium, assaying 24 percent and 34 percent Ti respectively, as a source material gave no coating whatever.

(I-10) Relation of Bath Temperature to Coating Thickness

Disks of low carbon steel were plated on one side from titanium sheet using a bath of 50-50 mol percent of NaCl and KCl, and 7 hours plating time. The iron was then dissolved by heating the sample at 60-80°C in a saturated solution of ferric chloride.

Approved for Public Release

Contrails

Final traces of iron on the titanium were removed with 1 to 4 nitric acid. The deposit was washed, dried, weighed, and analyzed for iron and titanium.

Figure 1 shows how the thickness of the titanium coating increases with the increased temperature of the bath. The thickness was calculated from the weight, using the density of pure titanium.

It can be seen that increased temperatures greatly accelerate the rate of deposition. From a practical standpoint this must be balanced against the greater loss of salt by fuming, greater corrosion of the container, and possible distortion of the object to be coated.

The temperature range for coating copper is more limited. Below 800°C very little coating is obtained, and the upper limit is set by the copper-titanium eutectic temperature of about 878°C. If this temperature is exceeded, the sample and the titanium source form a molten alloy. Several tests were made to plate titanium on copper in KCl-LiCl baths at temperatures lower than those reported above. No coating was visible after 4 hours at 450°C and less than 0.0001 inch was obtained at 600°C and 4 hours plating time.

(I-11) Relation of Time of Treatment to Coating Thickness

Using a procedure similar to that described in the previous section, iron samples were coated in a KCl-NaCl bath at 900°C for times varying from 1 to 16 hours. Subsequently the iron was dis-

Approved for Public Release

Contrails

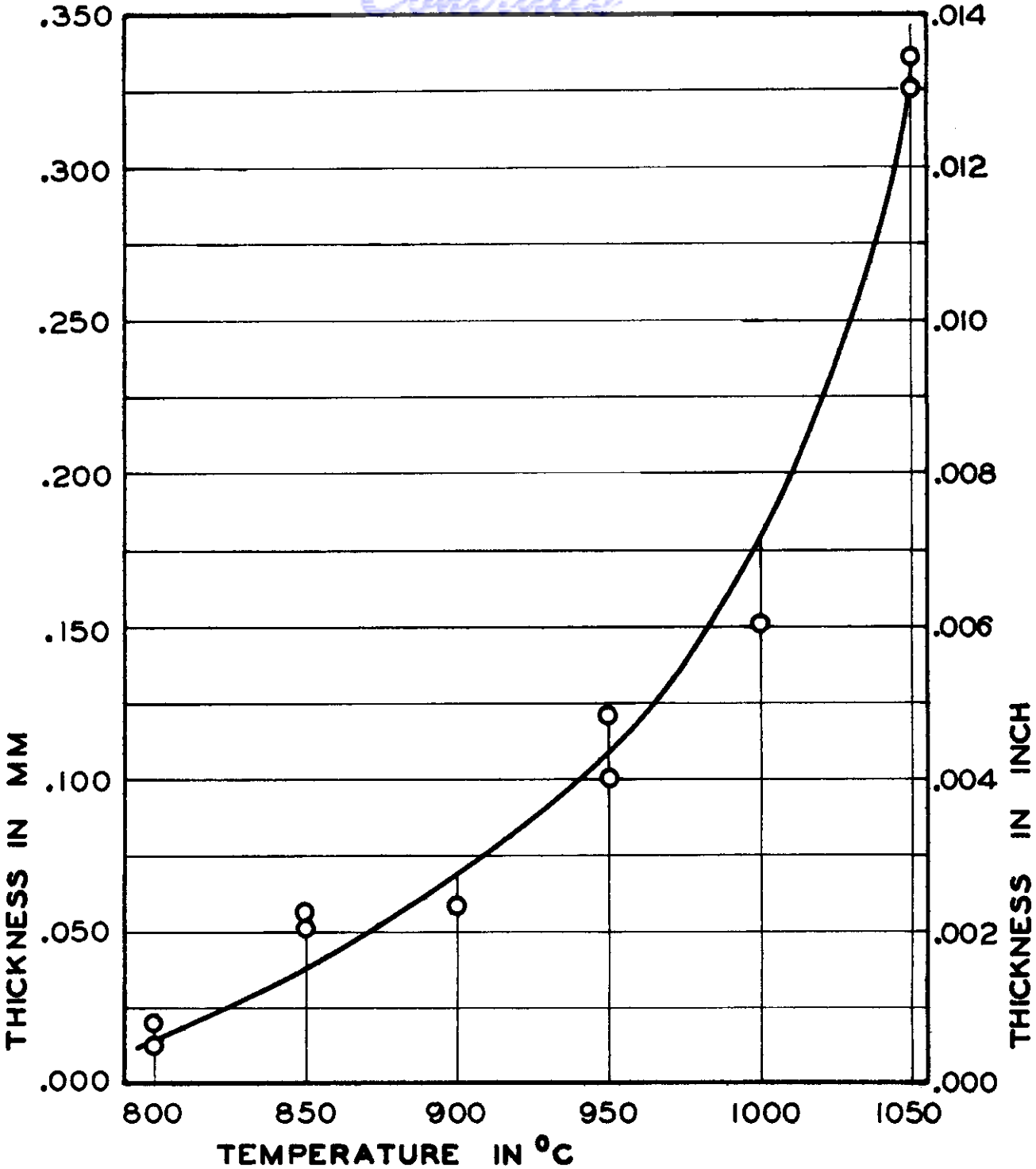

Figure 1. Thickness of Titanium Diffusion Coatings on Iron versus Temperature. (Seven hours deposition time in molten NaCl-KCl).

Approved for Public Release

Contrails

solved, the coating weighed, and its thickness calculated by assuming a density equal to that of titanium. The coatings were so thin for times less than 4 hours that no attempt was made to measure them. Figure 2 shows the results of this series of tests.

It can be seen that the thickness of the coating increases with time, but that there is much variation. This lack of reproducibility, especially when longer times are used, is related to the deterioration of the plating power of the bath. Undoubtedly, the pyrosol becomes oxidized in the open crucibles and loses its ability to form a coating, and the rate of oxidation is not the same in successive experiments. This raises the question of the desirability of a protective atmosphere, which is discussed in a later section of this report.

(I-12) Composition of Titanium Diffusion Coatings on Iron

The titanium coatings from the experiments reported in the previous two sections were analyzed for titanium and iron by colorimetric methods. The determination of titanium was made using hydrogen peroxide as a reagent (Weller's Method); iron was determined by the method of Moss and Mellon (10). The results are shown in Figures 3 and 4.

It can be seen that there is no great variation of composition with time of coating. The high iron content of the coatings from the low plating times may be due to the difficulty of dissolving all of the iron base metal from the very thin coating.

Approved for Public Release

Contrails

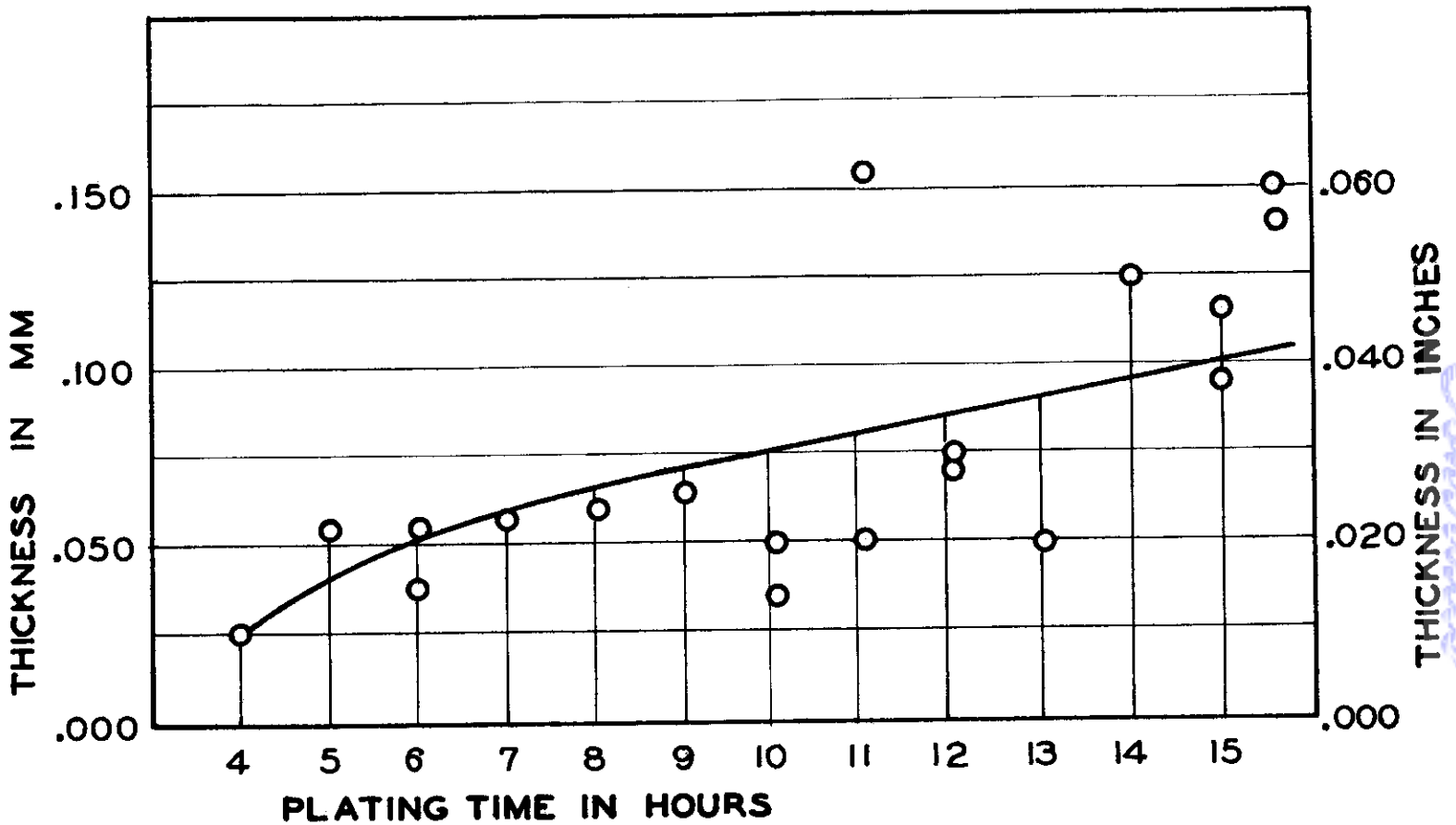

Figure 2. Thickness of Titanium Diffusion Coatings on Iron versus Deposition Time. (KCl-NaCl bath at 900°C).

Approved for Public Release

Contrails

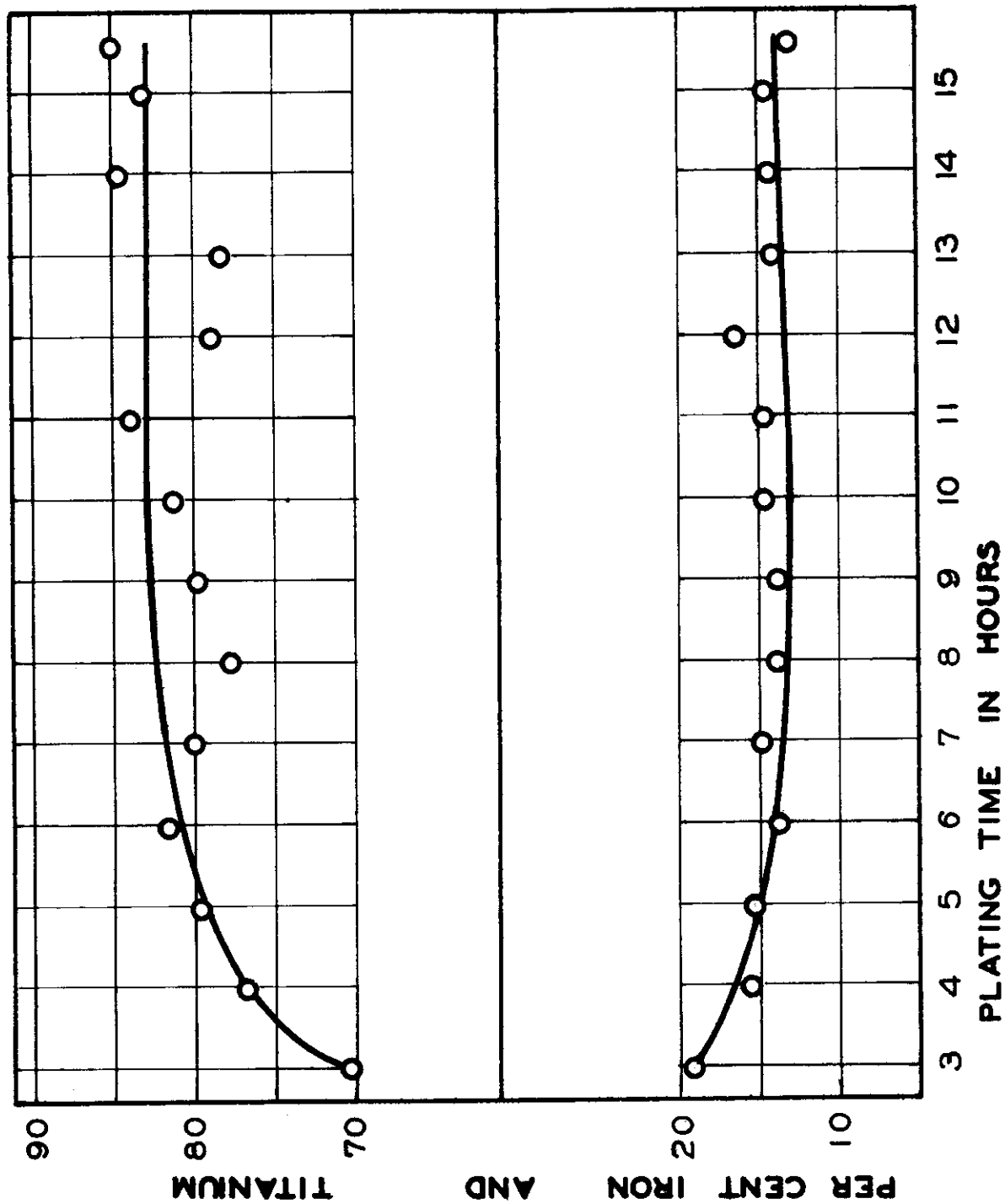

Figure 3. Titanium and Iron Contents of Titanium Coatings on Iron versus Coating Time. (KCl-NaCl bath at 900°C).

Approved for Public Release

Contrails

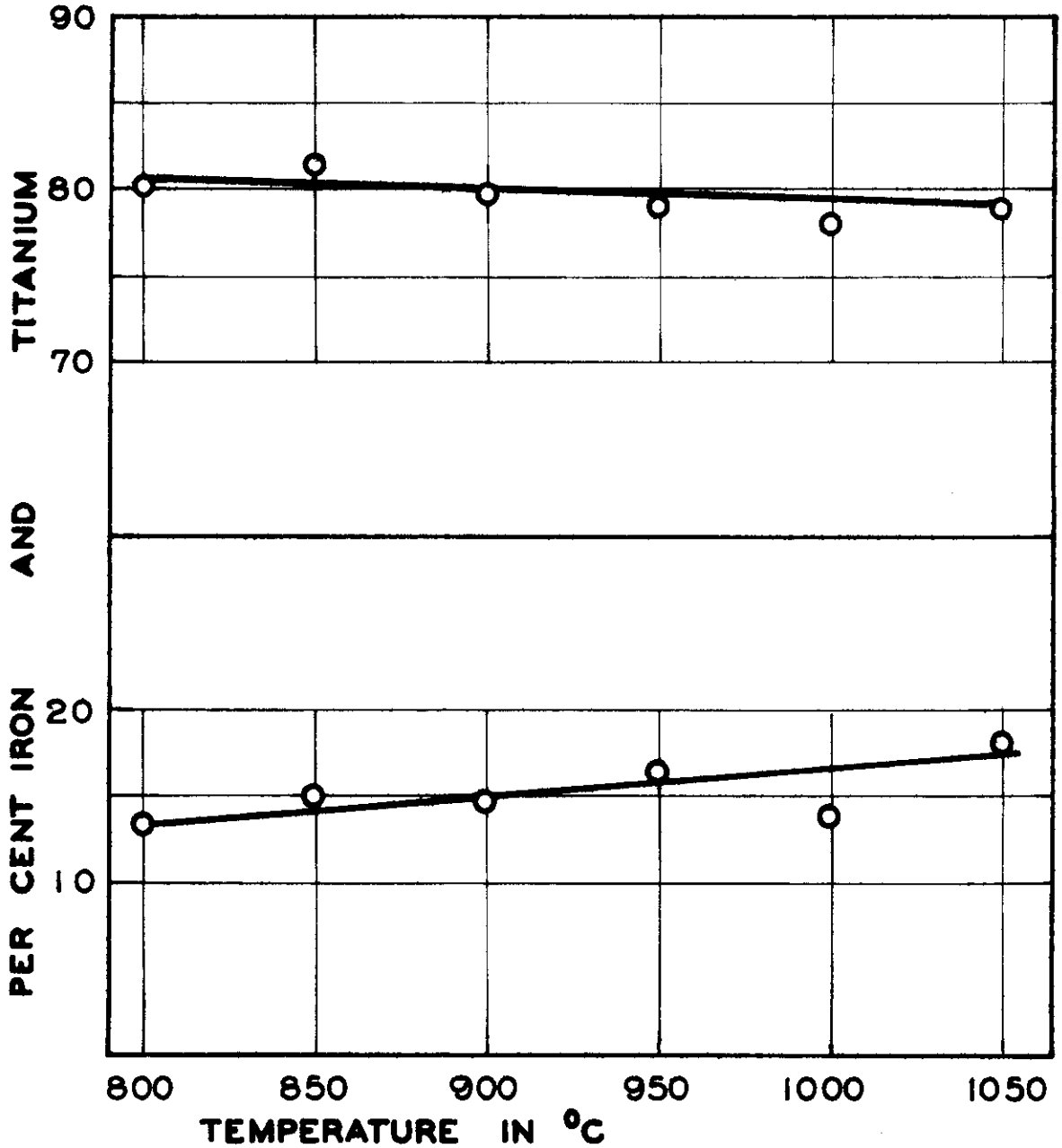

Figure 4. Titanium and Iron Contents of Titanium Coatings on Iron versus Temperature. (KCl-NaCl bath for 7 hours).

Approved for Public Release

Contrails

Likewise, there is no really significant trend of composition variation with temperature of deposition.

It should be pointed out that the coating which has been weighed and analyzed is that part which was not soluble in ferric chloride or the 1 to 4 nitric acid. Presumably the composition of the coating varies from almost pure titanium on the very outer surface to very low concentrations of titanium at the limits of diffusion into the iron. When the base metal is dissolved, any portion of the coating not sufficiently high in titanium to resist the action of the reagent will also be eaten away.

Therefore, the reported analyses of the coatings which are all close to 80 percent Ti, represent the average composition of the corrosion resistant layer.

As a matter of comparison, Samuel and Lockington (11) report that the composition of chromized coatings vary between 18.5 to 22.8 percent Cr, and that this composition bears no relation to temperature or time of deposition.

The sum of iron plus titanium in Figures 3 and 4 is in the neighborhood of 95 percent for all samples; the remaining 5 percent has not been identified. Spectrographic analysis shows no concentration of metallic impurities in the coatings.

(I-13) Effect of Carbon in Steel upon Titanium Diffusion Coatings

A series of tests were made on iron and steel samples of the following compositions.

Approved for Public Release

Contrails

Designation	C	Mn	P(max.)	S(max.)
Ingot iron	0.012	0.017	0.005	0.025
C 1012	0.10/0.15	0.30/0.60	0.040	0.050
C 1015	0.13/0.18	0.30/0.60	0.040	0.050
C 1036	0.30/0.37	1.20/1.50	0.040	0.050

Samples of the above were packed in titanium powder and heated in molten sodium chloride at 950°C for six hours. After treatment the samples were weighed to determine the increase in weight and then were sectioned, polished, and etched so that the titanium coating could be measured under the microscope. The results of the thickness measurements are shown graphically in Figure 5; the data on weight increase give an almost identical curve. All of the data plus that for tests on samples of even higher carbon content are summarized in Table 2.

The influence of carbon content can be seen by comparing Figure 6 and Figure 7 showing a titanium diffusion coating on ingot iron as contrasted with one on a 0.18 percent carbon steel.

It appears that the effect of carbon is to form titanium carbide which precipitates at the interface of the base metal and the coating; this new phase retards severely the diffusion of the titanium and hence the coating is much thinner.

Reference to the Ti-Fe-C ternary phase diagram shows that at 950°C the TiC field will be entered at about 0.12 to 0.15 percent carbon, so the results shown in Figure 5 are exactly those that would be expected.

These results do not mean that it is entirely impossible to

Approved for Public Release

Contrails

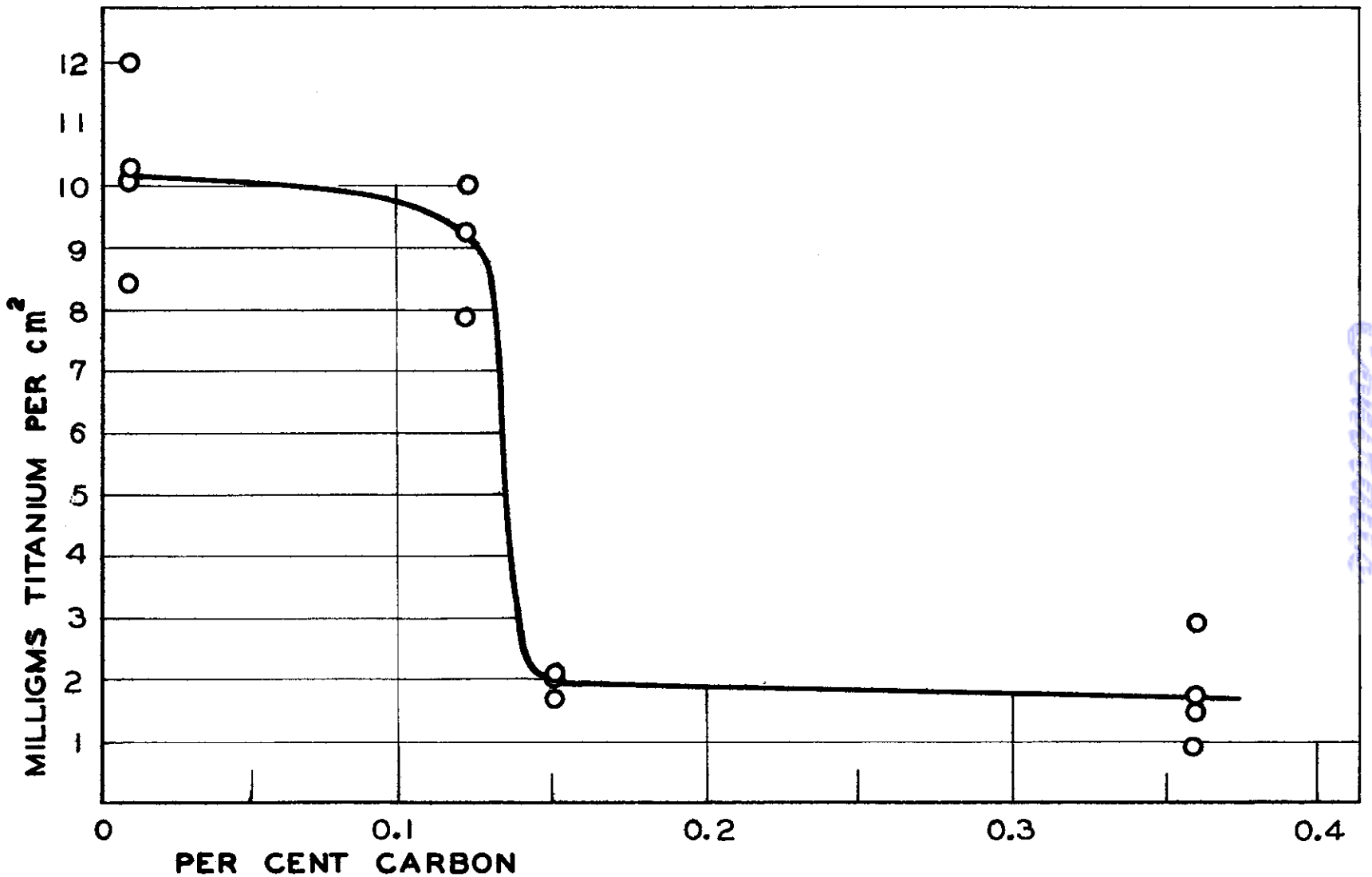

Figure 5. Weight of Titanium Deposited on Steel versus Carbon Content. (Samples coated for 6 hours at 950°C in NaCl).

Approved for Public Release

Contrails

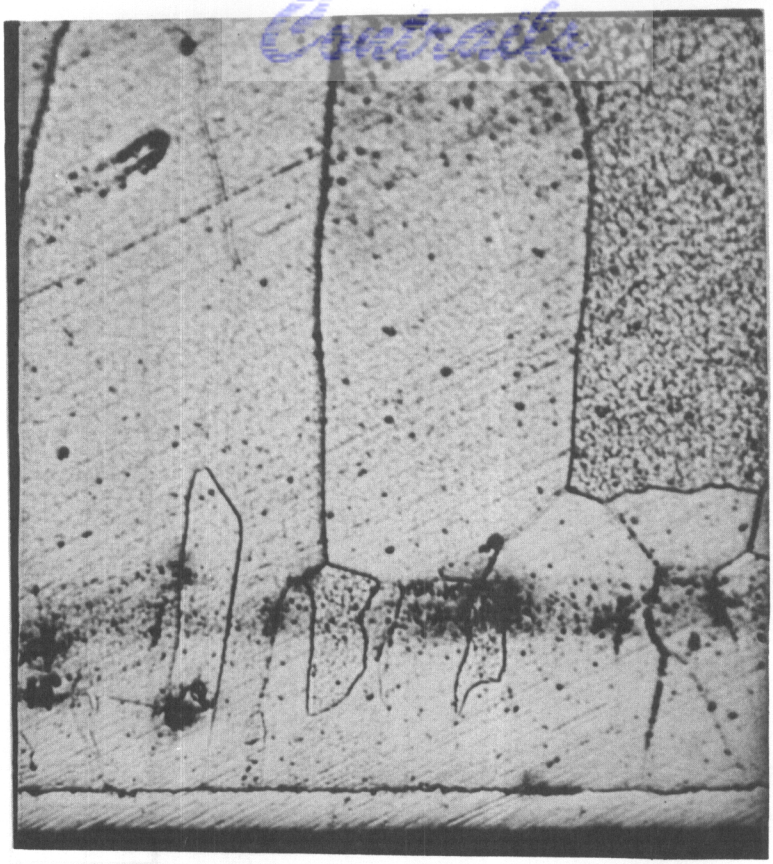

Figure 6. Titanium Diffusion Coating on Ingot Iron. (900°C for 2 1/2 hours, 500x, 5% Nital Etch.)

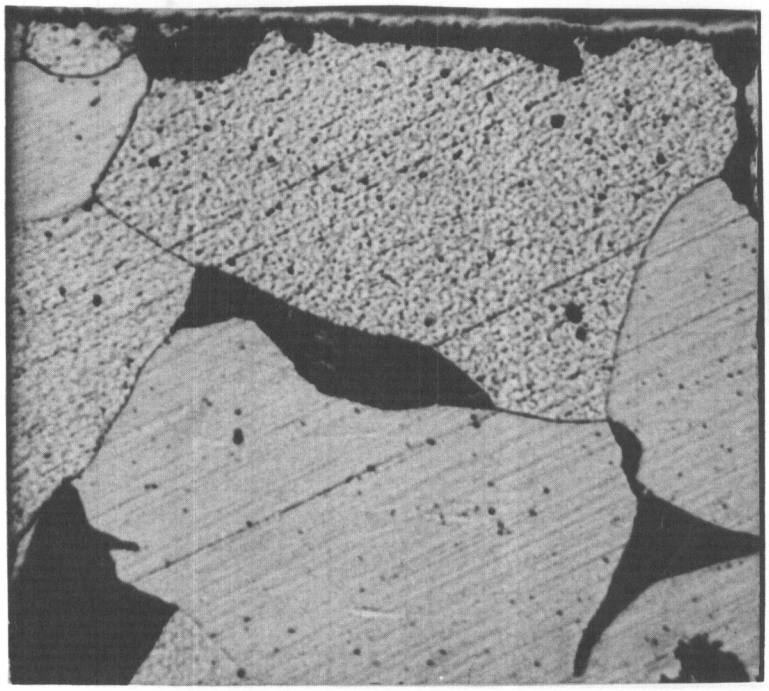

Figure 7. Titanium Diffusion Coating on 0.18 Percent Carbon Steel. (950°C for 2 1/2 hours, 500x, 5% Nital Etch.)

Approved for Public Release

Contrails

TABLE 2

Summary of Data Obtained in Correlation of Quality of Titanium Coating and Carbon Content

Carbon Content	Time (hrs.)	Temp.	Weight of Ti Plated (Mg/cm^2)	Plate Thickness (in.)	Susceptibility to Acid Attack (30% HNO_3)	Characteristics of deposit
0.01%	6	950	10.30 8.40 12.00	0.0011	None	Continuous and uniform
0.12%	6	950	10.1 10.1 7.80	0.00072	None	Continuous and uniform
0.15%	6	950	1.71 2.16 2.06	0.0002	Slowly attacked	Slightly patchy and non-uniform
0.36%	6	950	1.54 0.95 2.85	0.00016	Attacked more readily than 0.15% C sample	More patchy and non-uniform than 0.15% C sample
1.3%	6	950	None observed	None observed	Vigorously attacked	No coating visible
2.4% (as temper carbon)	6	950	0.00 0.003 mgs. plated	None	Vigorously attacked	No coating visible

Approved for Public Release

Contrails

coat steels of higher carbon content. The same problem is met in chromizing and has been circumvented in the following ways.

1) Use of special steels containing elements which are carbon stabilizers. These are known as IK steels in Germany.

2) Decarburization of a surface layer previous to coating.

3) Use of longer times and higher temperatures of coating.

4) Use of a carbide former such as vanadium chloride along with the chromizing compound.

Similar techniques are being tested for titanizing.

(I-14) Deterioration of Coating Bath and Use of Protective Atmosphere

A series of plating experiments were made wherein an object of mild steel was coated by being packed in titanium cuttings and heated in a fused NaCl bath at 900°C for 7 hours. The bath was cooled and then dissolved in water; the titanium cuttings thus recovered were used again with fresh NaCl for further runs. It was found that the second, third, and fourth use of the cuttings gave progressively worse coatings. It is assumed that an oxide coating forms on the titanium and prevents further pyrosol formation.

Similar experiments using a deoxidized salt bath and a protective atmosphere of helium gave patchy and unsatisfactory coatings. Thus the conclusion can be drawn that some oxygen is needed for the process, but an excess is detrimental.

Approved for Public Release

Contrails

(I-15) Conclusions

The procedure described in this section will successfully form a diffusion coating of over 80 percent average titanium content on iron, copper, and other metals. This coating has the corrosion resistant properties of titanium in contrast to the non-resistant coatings described previously in the literature.

The titanizing process requires relatively high temperatures, but no more so than chromizing which is used commercially to a considerable extent.

Approved for Public Release

Contrails

SECTION II

CORROSION OF TITANIUM IN FUSED SALTS AND IDENTIFICATION OF PRODUCTS

(II-1) Introduction

In the previous annual report (12) on this project and in a more detailed article (8) by the present authors it has been shown that metallic titanium is severely attacked in fused chloride melts if oxygen is present.

This phenomenon is of interest not only as it applies to the behavior of titanium in such circumstances, but because it has a direct bearing on the procedure for obtaining titanium coatings as described in the previous section.

The chief corrosion product formed when titanium is attacked by fused chlorides is a finely divided solid of almost pure titanium, which can be called a "pyrosol" after the terminology of Lorenz (9). Experience has shown that metallic objects immersed in a high concentration of this pyrosol will be "titanized".

The effect of temperature and time on the extent of corrosion and identification of the products is described in detail.

(II-2) Experimental Procedure

The titanium samples were made of Allegheny Ludlum Steel Corp. titanium wire of 99+ percent purity. The wire was first cut into pieces of about 30 cm. length and made into coils. These were

Approved for Public Release

Contrails

weighed and suspended in the molten salt bath, which consisted of U. S. P. Grade-Granular NaCl, melted in a porcelain crucible heated in a resistance furnace. The titanium sample was suspended on a platinum hook, hanging from a porcelain rod resting across the crucible top so that there would be no deposit formed on the crucible during heating.

After being heated at a given temperature for the determined length of time, the samples were taken from the molten bath. The corroded samples were covered with a blue-black mass of salt and residue. The material left inside of the crucible was grayish white near the bottom with a yellowish white rim at the top periphery of the bath.

The dark residual mass was dissolved in water and the black residue obtained was decanted several times with hot water and then dried. There was also a gray residue left when the salt remaining in the crucible was dissolved in hot water; this gray residue was treated in the same way as the black residue. The yellowish white reaction product collected from the periphery of the dry salt bath was washed with hot water, decanted, and dried. A yellowish white residue was obtained. Since this residue and the gray one gave nearly the same x-ray patterns, no further distinction was made between them. All of these collected products were weighed, and the loss of the titanium sample was also determined.

(II-3) Analysis of the Corrosion Products

The titanium content of the residues was determined by col-

Approved for Public Release

Contrails

lecting the hydrogen gas evolved from the dissolution of the dispersed metallic titanium in hydrofluoric acid. The composition was also checked by x-ray diffraction methods.

The apparatus used for determination of titanium content in the residues by measuring the hydrogen evolution consisted of an Erlenmeyer flask to hold hydrofluoric acid, a spoon to hold the sample for analysis, and a burette to collect the hydrogen gas evolved. The lower portion of the flask was lined with paraffin on the inside walls to protect the glass from reacting with the hydrofluoric acid.

The method of analysis was checked by running samples of the original titanium wire, and results of 99.1 to 99.8% Ti were obtained.

(II-4) Weight Loss of Titanium in Fused NaCl versus Time and Temperature

The actual weight loss of the titanium samples in fused NaCl at various times and temperatures is shown in Table 3 and Table 4.

A plot of these data shows a straight line relationship for loss of weight versus time and versus temperature.

(II-5) Amount and Composition of Black Residue

The black residue was a fine powder; under the microscope the individual particles showed a bright metallic appearance. The amount of this black residue recovered was fairly proportional to the weight loss of the titanium sample, varying between 54 to

Approved for Public Release

Contrails

TABLE 3

Weight Loss of Titanium Samples Due to Corrosion in Fused NaCl baths at a Constant Temperature of 880°C

Exp. No.	Time of heating (hr.)	Wt. of sample (g.)	Wt. of Ti sample after corrosion (g.)	Wt. loss (g.)	Wt. loss %
41	1	0.6330	0.5973	0.0357	6.33
42	1	0.6345	0.5992	0.0353	5.57
32	2	0.6344	0.5568	0.0776	12.23
33	2	0.6334	0.5359	0.0975	15.40
4	3	0.6270	0.4823	0.1447	23.07
5	3	0.6288	0.4866	0.1422	22.61
6	3	0.6323	0.4546	0.1777	28.02
7	3	0.6239	0.4798	0.1441	44.40
11	4	0.6218	0.4425	0.1793	28.85
12	4	0.6323	0.4524	0.1799	28.45
21	6	0.6288	0.3490	0.2798	44.40
22	6	0.6323	0.3336	0.2987	47.30

TABLE 4

Weight Loss of Titanium Samples Due to Corrosion in Fused NaCl Baths. Time of Heating Constant at Three Hours.

Exp. No.	Temp. (°C)	Wt. of Ti sample	Wt. of Ti sample after corrosion (g.)	Wt. loss (g.)	Wt. loss %
4	880	0.6270	0.4823	0.1447	23.07
5	880	0.6288	0.4866	0.1422	22.61
6	880	0.6323	0.4546	0.1777	28.02
7	880	0.6239	0.4798	0.1441	23.10
51	950	0.6340	0.4013	0.2327	36.70
52	950	0.6330	0.4038	0.2292	36.20
61	1000	0.6298	0.3345	0.2953	46.85
62	1000	0.6300	0.3276	0.3024	48.00

Approved for Public Release

Contrails

80 percent, but usually between 60 and 70 percent. Thus the weight of black residue was also proportional to the length of time and to the temperature of the corrosion process.

Analysis by hydrogen evolution of the black residue indicated that the metallic titanium content varied between 75.2 and 85.9 percent. No relation could be found between the percent metallic titanium in the black residue and the temperature or time of the corrosion process which formed the residue.

X-ray diffraction analysis of the black residue gave a value for c = 4.786 Å and c/a = 1.610. Comparing these values with the parameter values of titanium-oxygen alloys given by Bumps, Kesseler, and Hansen (13) leads to the conclusion that the residue contains from 8 to 12 percent oxygen.

(II-6) Amount and Composition of the Gray Residue and Yellow White Residue

X-ray diffraction patterns of the gray and yellow white residues showed that they were both TiO_2 in the crystal form of rutile; no difference could be detected in the patterns.

When these residues were placed in HF solutions, a slight evolution of hydrogen was obtained from the gray residue.

This would indicate that the gray and white residues are both formed from the oxidation of titanium and are identical except for a very small amount of dispersed metallic titanium in the gray residue.

The oxide residues vary from 37 to 77 percent of the weight

Approved for Public Release

loss of the original titanium sample. Thus the Ti content of the TiO_2 residues is 22 to 46 percent of the weight loss.

(II-7) Influence of Alternating Current on Corrosion of Titanium in Fused Salts

The work of Copson (14) showed that the passage of an alternating current caused the rapid corrosion of nickel electrodes submerged in molten chlorides. It was thought that this might be a means of rapidly building up the concentration of titanium pyrosol in the bath to be used subsequently for plating.

The titanium electrodes, which had an alternating current passed through them in an attempt to speed up corrosion, were riveted to the ends of copper lead wires and immersed in a NaCl bath at 850°C. The copper lead wires were protected from the severe attack of the NaCl fumes in the furnace by running them through a two holed, porcelain, insulator, which protected them from below the liquid-air interface to well above the top of the furnace. The 110 v. A.C. supply was reduced to the voltage required by a variable transformer, an ammeter was connected into one of the leads to a titanium electrode, and a voltmeter connected across the leads to both electrodes.

The titanium electrodes were weighed, and the surface area measured before immersion, and weighed again after the end of the test to determine the loss in weight and corrosion rate at various current densities.

A piece of asbestos paper at the top of the electrodes spreading them apart assured a constant distance between the electrodes during the duration of the test, and removed any possibility of

Approved for Public Release

the electrodes touching and short circuiting.

Current densities ranging from 1.86 to 10.66 amps per sq. in. were tried and also at 9.72 amps per sq. in. with one percent Na_2O added to the NaCl bath, because Copson had found that Na_2O increased the attack on nickel electrodes.

The results varying from 0.9 to 11.5 mg/cm^2-hr. loss showed no relation to the amperage imposed and were actually less than the loss increased when no current was used. It can be concluded that within the range of our experiment the use of alternating current was not helpful.

(II-8) Discussion

Although the phenomenon of corrosion of titanium in fused salt baths at elevated temperatures and the formation of pyrosols resembles in many points the pyrosols as described by Lorenz and Eitel (9), and investigated further by Heymann (15), Farquharson (16) and Cubicciotti (17), there are certain differences. The pyrosols described by the previous workers were usually prepared by mixing metals of low melting points in molten baths of their own salts. For example, lead in molten lead chloride expels gray clouds which then disappear completely at higher temperatures, probably by forming a true solution with the molten salt. Upon cooling, the gray metallic fog appears again because of aggregation of the lead particles into larger units. With slow cooling the particle size grows larger. In the case of titanium however, the metallic dispersions are formed in fused alkali salts (salts of titanium itself

Approved for Public Release

were not tried), at temperatures far below the melting point of the metal itself. Furthermore, for formation of metallic titanium dispersions the presence of air (oxygen) is necessary, as the pyrosol formation in vacuum or under inert gases occurred to a very limited extent. Because of experimental difficulties, no attempt was made to raise the temperatures of the melts above 1000°C, or higher, in order to check whether the metallic fog will dissolve completely in the melts, and then crystallize out upon cooling. Nevertheless, the cooled melts with the titanium dispersion resembled salts colored by colloidally dispersed substances. The transparent salt near the titanium appeared black to blue, but a part of the metallic dispersion was in the form of coarse powder which settled to the bottom of the crucible. Regardless of the grain size of these metallic dispersions, the system, molten salt - dispersed titanium, can be called a "pyrosol", and the observed corrosion phenomena are to a great extent due to the pyrosol formation. The reasons for this kind of corrosion are at present unknown; this action seems to be not electrochemical in nature, but is related to the partial oxidation of the titanium in the melt or in the salt fumes.

(II-9) Conclusions

Titanium metal is strongly attacked by fused NaCl baths in the presence of oxygen or moisture. Within the limit of our experiments, the weight loss of the samples is proportional to the time of exposure and temperature of the bath.

The products of corrosion can be roughly divided into a black

Approved for Public Release

residue and a combined gray-white residue. The black residue, usually amounting to 60 or 70 percent of the weight loss, was a finely divided material, which we have called a pyrosol. Measurement of hydrogen evolution in HF indicates that the black residue contains from 75 to 86 percent metallic titanium. X-ray diffraction patterns are similar to those of metallic titanium with approximately 12 percent oxygen in solution.

The gray-white residue has the x-ray diffraction pattern of rutile and contains 22 to 46 percent of the titanium corroded from the sample.

Approved for Public Release

Contrails

SECTION III

ELECTROCHEMICAL BEHAVIOR OF A TITANIUM-FUSED SALT-PLATINUM CELL

(III-1) Introduction

It is well known that it is extremely difficult to deposit titanium from molten salt baths with an external current; the metal may be deposited under an inert atmosphere in the form of powder, flakes, or as a very thin layer, but no deposition is observed if air (oxygen) is present to any appreciable extent.

It would be of value to know the reasons for this behavior, and to determine the action of air and moisture during electrolysis. Such knowledge might furnish clues to the successful solution of the problems of the electrodeposition of titanium.

One of the obstacles to the electrodeposition of titanium in the presence of air is the high susceptibility of this metal to oxidation, and to corrosion in molten salts at elevated temperatures, as pointed out in the previous sections. Titanium, if deposited on the cathode, may disperse in the molten salt because of pyrosol formation, thus retarding the deposition process. However, it is doubtful if pyrosol formation alone is the chief deterrent to the deposition of the metal, especially if the cathode is capable of forming a solid solution with titanium. The fact that in the presence of air or moisture no titanium is cathodically deposited points towards other electrochemical or chemical events

Approved for Public Release

Contrails

which hamper the electrodeposition.

The behavior of the cell Ti/fused salt/Pt in various gases and in the presence of water vapor gives some answers to the problems of deposition.

(III-2) Experimental Procedure

A preliminary experiment showed that a cell consisting of titanium and platinum electrodes immersed in molten sodium chloride produced a fairly strong current if the electrodes were short circuited through a milliameter. The direction of the current indicated that titanium went into solution acting as an anode with the platinum as the cathode.

In order to explore this phenomenon in detail a cell was constructed which made it possible to accumulate separately the anodic and cathodic reaction products for subsequent analysis. A copper tubing was also provided for introducing gases and steam into the cathodic compartment. The arrangement is shown in Figure 8. Air had access to the crucible in the furnace, although a loose cover was made from a piece of fire resistant brick.

To determine the influence of air (oxygen), an arrangement was made so as to heat the crucible C (Fig. 8) in vacuum or in an inert gas, and simultaneously to measure the emf of the open cell or the current delivered by a chosed cell. This was accomplished by placing the crucible together with the electrodes and salt in a quartz glass tube, as shown in Fig. 9. The lower part, C, of this apparatus was placed into the furnace (Fig. 8).

Approved for Public Release

Contrails

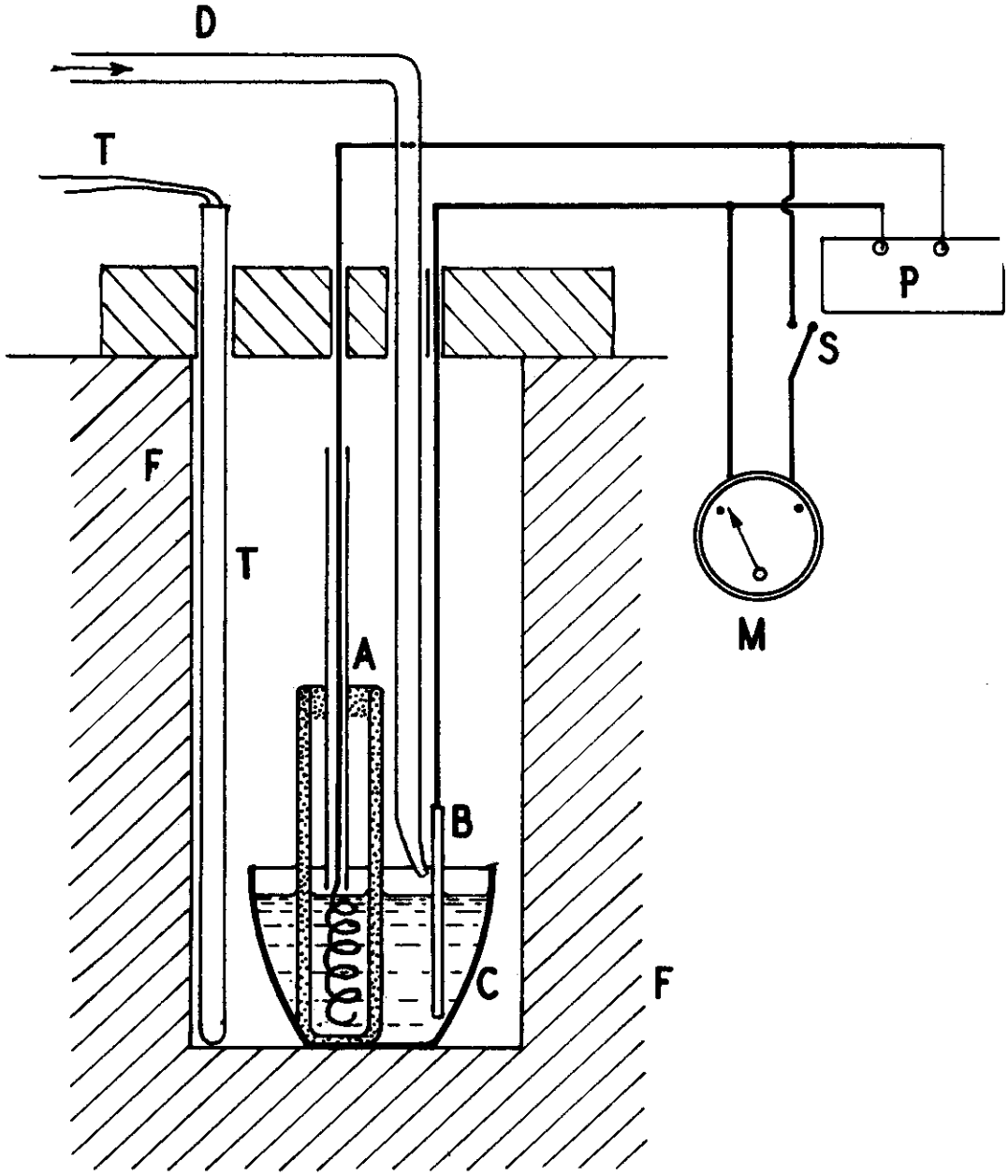

Figure 8. Arrangement of the Ti/Salt/Pt Cell for emf and Current Measurements.

A - Ti wire anode in a porous Al_2O_3 thimble with the top open or closed. B - Pt cathode (3 cm^2). C - Porcelain crucible containing the alkali salt or mixture of salts. D - Copper tubing for gas introduction. F - Resistance furnace. M - Milliameter. P - Potentiometer. S - Switch. T - Thermocouple.

Approved for Public Release

Contrails

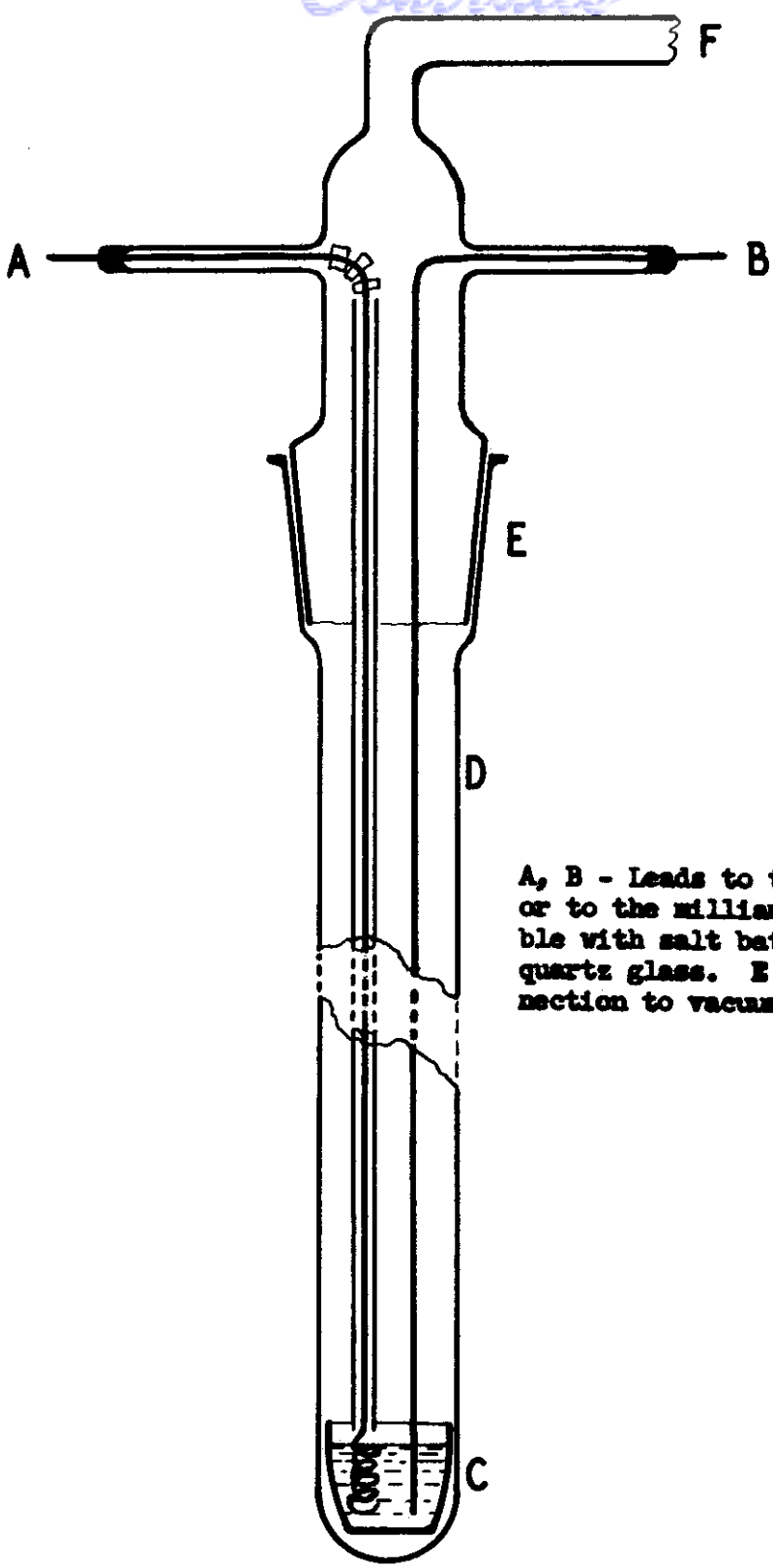

A, B - Leads to the potentiometer or to the milliammeter. C - Crucible with salt bath. D - Tube of quartz glass. E - Joint. F - Connection to vacuum and gas supply.

Figure 9. Arrangements of the Ti/fused salt/Pt Cell for emf and Current Measurements Under a Protective Atmosphere.

Approved for Public Release

Contrails

The operating procedure was as follows: the temperature of the furnace was raised to 880°C or higher to melt completely the salts, and then lowered to the working temperature of 850 or 800°C, which is above the melting point of the 50-50 mol percent KCl-NaCl mixture. Some runs were made in pure sodium chloride and some in pure potassium chloride. Measurements of the emf of the Ti/molten salt/Pt cell were continued until this force became approximately constant. Then the switch S (Fig. 8) was closed, and the current produced by the cell was registered. After the cell had operated for several hours, the circuit was disconnected, the thimble A (anodic compartment, Fig. 8) removed from C, and the furnace cooled down. The salts of the anodic and cathodic compartments were separately dissolved in water and the solutions were analyzed as to their content of acid and of base. Methyl orange was used as indicator.

(III-3) The Electromotive Force of the Cell in Air

Measurements of the potential difference (emf) of the cell Ti/molten KCl/Pt were made in air and continued until this difference became approximately constant. Then the temperature was changed in order to establish the relation between the emf and the temperature. The cell generated an emf of about 1.48 volts at 900°C. The potential fluctuated during all of the experiments, but finally a fairly constant value (actually slowly decreasing) was established at a given temperature. There seems to be no relation between temperature and emf; usually the emf increased

Approved for Public Release

slowly from the beginning of the experiment up to a maximum value and then decreased slowly.

The values for the emf in a 50-50 mol percent mixture of sodium and potassium chloride were approximately the same, reading about 1.48 volts at 800°C. In pure sodium chloride they were somewhat lower, approaching 1.46 volts at 950°C. All of these potential measurements represent open circuit values. If a current was drawn from the cell, the emf dropped immediately (measured after opening the circuit), but started to increase slowly as long as the circuit was open and the temperature was constant; finally in several hours attaining the values mentioned above.

(III-4) The Electromotive Force of the Cell in Vacuum

The emf as developed by the cell in an inert atmosphere or vacuum was much lower than that in air and fluctuated between .45 and .60 volts. The experiments in vacuum could not be continued for very long, because the salt evaporated quickly from the crucible. Therefore the remaining experiments were made using nitrogen under slight pressure (about 100 mm Hg), with the cell developing approximately the same emf as under vacuum.

Replacing the nitrogen with helium or hydrogen gave essentially the same results.

(III-5) The Current Produced by the Cell

As soon as the switch of the Ti/molten salt/Pt cell was closed, such a strong current was developed in the first moments that it

Approved for Public Release

usually could not be measured by the instruments in the circuit. In a few seconds the current dropped abruptly, and slowly approached a fairly constant value, although it always fluctuated somewhat. The sudden drop of the current is, of course, typical for a cell displaying polarization phenomena at the electrodes.

After the cell had been operating for a certain time, the circuit was opened and the furnace cooled. The salt from the anodic and cathodic compartments was removed, and separately dissolved in water. Qualitative tests showed that the solution obtained from the salt of the anodic compartment was strongly acidic, while that of the cathodic compartment was basic. A series of quantitative determinations was made in order to establish the amount of acid and base produced by the working cell.

The number of milliampere minutes delivered by the cell were determined and from this was calculated the equivalents of metal going into solution in the anodic compartment as well as the deposition on the cathodic compartment. Because the electrolyte was usually a mixture of sodium and potassium chloride, only the equivalents or milliequivalents produced could be calculated; (1608 milliampere minutes to correspond to one milliequivalent). The amount of acid and base produced by the working cell was determined by titration of the aqueous solutions of the salts of the separate compartments, and was compared with the calculated results based on the milliampere minutes which flowed through the circuit. The results are summarized in Table 5.

Approved for Public Release

Contrails

TABLE 5

Acid and Base Produced by the Working Ti/Molten Salt/Pt Cell in Milliequivalents.

Run No.	Salt	Milliequiv. calc. (from current)	Acid in m.e.q. anodic comp.	Base in m.e.q. cathodic comp.	Ratio of m.e.q. titrated to m.e.q. calculated
II	NaCl-KCl	1.18	0.37	0.51	0.51/1.18 = 0.44
Ia	NaCl-KCl	3.5	--	1.76	0.50
III	NaCl-KCl	7.35	3.45	5.05	5.05/7.35 = 0.69
IV	NaCl-KCl	9.55	5.24	6.0	6.0 /9.55 = 0.63
6	KCl	4.65	1.91	2.81	2.81/4.65 = 0.60
7	KCl	2.29	1.12	1.68	1.68/2.29 = 0.74
9	NaCl	3.14	0.87	1.46	1.46/3.14 = 0.47

Table 5 shows clearly that acid and base are formed in appreciable amounts in the anodic and cathodic compartments, varying from 44 to 74 percent of the value as calculated from the current by the cell. The fact that the base and acid generated is appreciably lower than the theoretical value can be attributed to diffusion of the reactions products through the porous alundum diaphragm so that partial neutralization occurred, and as a consequence a smaller amount of base and acid was titrated.

(III-6) Influence of Various Gases on Current Produced

A series of qualitative experiments were made to determine the mechanism responsible for production of potential and current in the cell. It was found that the magnitude of the current obtained was dependent upon the presence of oxygen, similar to the results obtained for the emf of the open circuit cell. At 800°C the cell delivered 35-40 milliamps; if the quartz tube containing the cell was evacuated the current dropped to 0.27 milliamps or less. Upon admission of air, again the current increased by a

Approved for Public Release

Contrails

factor of 100 or more. This cycle could be repeated only a limited number of times, because the salt evaporated from the crucible when the vacuum was applied. However, alternate cycles of air and nitrogen gave respectively high and low currents for many repetitions. It seemed quite evident that oxygen acted as a depolarizer, maintaining by its presence the emf of the working cell. The action of other neutral gases was similar to that of nitrogen; they all decreased the current produced by the cell as soon as they displaced the air.

To check once more the depolarizing action of oxygen, it was introduced through a quartz glass tube into the furnace so that the gas stream impinged upon the platinum cathode. Immediately a current was observed with up to 4 times the value observed in air, indicating a pronounced depolarizing effect. Upon decreasing the oxygen stream, the current decreased also. However, it was necessary to prove whether the strong current observed on introducing oxygen was actually due to the depolarizing action at the cathode, or simply the result of stirring the electrolyte with the gas stream. If stirring caused the increase of current, then it could be expected that a nitrogen stream introduced near the cathode would also increase the strength of the current delivered by the cell. However, a nitrogen stream on the cathode caused a decrease of the current until it became even less than it was in air. Therefore, the effect of stirring of the bath was far below the effect caused by the chemical action of oxygen.

Water vapor was introduced into the crucible of Fig. 8 through

Approved for Public Release

Contrails

the tubing D. The effect of the water vapor was quite impressive and resulted in currents which sometimes exceeded those generated in the presence of oxygen. Water vapor acted as a strong depolarizer.

In all experiments in which the current produced by the cell or the potential difference of the open cell was measured, it was impossible to say where the polarization or depolarization of the working cell occurred, whether on the anode or cathode, or on both electrodes simultaneously. Because of experimental difficulties and the lack of good reference electrodes for temperatures close to 900°C, no attempts were made to measure the single potentials of the electrodes. However, an attempt was made to get an answer in an indirect way. For this purpose the titanium anode was completely encased in an alundum thimble by sealing its top with alundum cement and asbestos wool. Thus, the oxygen access to the anode was very limited. Oxygen, nitrogen, and steam were admitted alternately into the furnace near the cathode and the milliammeter readings were observed. The qualitative results obtained are shown in Table 6. It should be remembered that in such an experiment the current with admitted nitrogen never dropped to zero, because the nitrogen only diluted the oxygen present in the furnace, as already mentioned. Nevertheless, the experiment showed quite well the influence of the steam and oxygen. Table 6 shows that a remarkably strong current can be drawn from the small cell for a period of several hours. The effect of oxygen, steam, or nitrogen upon the current is decisive and appears immediately. Therefore, the polari-

Approved for Public Release

Contrails

TABLE 6

Depolarizing Effect of Oxygen and Steam on the Ti/NaCl/Pt cell at 900°C
(Ti anode was encased in a coarse grained alundum thimble. Time indicates the period after closing the circuit, and the moments at which the operations indicated are performed.)

Time in min.	Gas admitted	Current in m.amps.
20	Air	85
25	N_2 in	25
27	N_2 off	85
30	O_2 in	150
33	O_2 off	120
39	N_2 in	75
41	N_2 off	110
45	O_2 in	150
47	O_2 off	120
49	N_2 in	90
51	N_2	80
53	N_2 off	107
60	Steam in	170
61	Steam off	150 to 130
66	N_2 in	100
68	N_2 off	135
69	O_2 in	150
70	O_2 off	125
71	N_2 in	90
76	Steam in	150
	and so on.	

zation and depolarization occurred mainly on the platinum cathode.

(III-7) Discussion

There seems to be only one way to explain the behavior of the Ti/fused salt/Pt cell without contradictions. It has to be assumed that the titanium anode going into solution in the fused salt bath in form of Ti^{3+} or Ti^{4+} ions (in the presence of oxygen at the high temperature the oxidation of Ti^{3+} to Ti^{4+} would occur anyway) is the source of energy. Therefore, the anodic process is (4):

$$Ti^{\circ} = Ti^{3+} + 3e \quad \text{or} \qquad (1)$$
$$Ti^{\circ} = Ti^{4+} + 4e$$

Approved for Public Release

Contrails

The electrons liberated pass into the platinum cathode, and attract the positive ions, which can only be the sodium or potassium ions. However, these ions can be discharged only in a limited amount to form a very thin alkali metal layer on the platinum cathode, because the potential of the titanium is insufficient for a continuous reduction of alkali ions. The formation of such layers has been discussed previously (18). Under these conditions, only an insignificant emf is developed by the cell. The situation changes as soon as oxygen has access to the cathode; the electrons at the cathode can now be discharged at a fast rate by

$$4e + 4Na^{+} = 4Na^{\circ} \qquad (2)$$

because another cathodic energy delivering process is occurring:

$$4Na^{\circ} + 2O = 2Na_2O \qquad (3)$$

Sodium peroxide may be also formed. The final process occurring in the cell during its operation is the sum of (1), (2), and (3):

$$\begin{aligned} Ti^{\circ} + 4Na^{+} + O_2 &= Ti^{4+} + 2Na_2O \text{ or} \\ Ti + 4NaCl + O_2 &= TiCl_4 + 2Na_2O \end{aligned} \qquad (4)$$

Titanium displaces the sodium from the sodium chloride melt, and the sodium is oxidized by the oxygen of the air. Of course, a still better cathodic depolarizer is pure oxygen or water vapor; the latter reacts violently with the sodium with liberation of hydrogen.

(III-8) Conclusions

The experiments showed that in the presence of air, alkali oxides were produced on the cathode of a galvanic cell Ti/fused salt/Pt by the emf of the titanium itself. If the same cell is

Approved for Public Release

Contrails

now used for electrolysis by applying an external current and with titanium as the anode, alkali oxides will be formed on the cathode. This will happen even in the presence of titanium cations, because the formation of alkali oxides occurs at a lower potential than required for the discharge of Ti^{4+}, as shown by the cell experiment. Hence no titanium can be deposited on the cathode because of this reason (other reasons are mentioned in the introduction).

The discharge of alkali cations on the cathode may also occur under an inert gas atmosphere, especially when the concentration of the titanium salt in the bath is low. Hence the discharging alkali ions will hamper the deposition of titanium in the regular growth of the deposit, and formation of titanium powder will be favoured. Furthermore, it may be that the formation of titanium powder is also due to the reduction of titanium ions by the electrolytic alkali metal formed (19). The possibility that titanium powder is formed through secondary reactions such as $Ti^{4+} + 4Na = Ti^{\circ} + 4Na^{+}$ is supported by observations on deposition of aluminum from cryolyte baths where, if the current is too strong (the voltage applied is too high, or the concentration of Al_2O_3 in the bath is too low), alkali metals are discharged together with aluminum.

If the concentration of metallic titanium particles in the interface of the cathode during the electrolysis and the temperature is high enough, alloy formation with the cathode by direct contact of the particles may occur.

Approved for Public Release

Contrails

SECTION IV

HYDROGEN OVERVOLTAGE ON TITANIUM

(IV-1) Introduction

The previous annual report of this project gave the experimental procedure and resulting data for a great many determinations of the hydrogen overvoltage on titanium. One interesting feature was that the hydrogen overvoltage versus current density relationship did not follow Tafel's Law in hydrofluoric acid solutions.

Subsequently, experiments were made using basic solutions of KOH and NaOH, and also solutions of organic acids.

From all of the experiments formed the following general conclusions can be drawn.

(IV-2) Conclusions from all Experiments on the Hydrogen Overvoltage on Titanium

(1) The hydrogen overvoltage on titanium obeys Tafel's law in acids such as H_2SO_4, HCl, HBr, CH_3COOH, CF_3COOH, and also in bases such as NaOH and KOH.

(2) Tafel's law does not hold in the case of hydrofluoric acid. Instead of the usual semi-logarithmic relationship, there is a linear relationship between overvoltage and current density.

(3) In hydrofluoric acid solution, the addition of ammonium, potassium, or sodium fluoride increases the hydrogen overvoltage considerably. Sodium fluoride is most effective in this respect.

Approved for Public Release

Contrails

With a larger amount of sodium fluoride added, above one third of a mole, Tafel's law is found to be followed again.

(4) Addition of organic agents such as gum Arabic or agar-agar also increases the hydrogen overvoltage in hydrofluoric acid.

(5) The presence of oxygen has the effect of shifting the hydrogen overvoltage potential slightly in the less negative direction.

(6) From considerations of the hydrogen overvoltage alone, it would seem that conditions are favorable for discharge of titanium, but electrodeposition of titanium has not been achieved from aqueous solutions.

Approved for Public Release

Contrails

BIBLIOGRAPHY

1) Laissus, J., Contributions to the Study of Metallic Cementation, Revue de Metallurgie, 24, 764 (1927).

2) Kase, T., Cementation of Some Metals by Means of Ferrotitanium Powder, Kinzoku No Kenkyu, 13, 50 (1936).

3) Cornelius, H. and Bollenrath, F., The Effect of Carbon on the Diffusion of Some Elements in Steel, Arch. Eisenhüttenw., 15, 145 (1941).

4) Alexander, P. P., Coating Metal Articles, U. S. Pat. 2,351,798 (1944).

5) Chapin, E. J. and Hayward, C. R., Copper-Titanium Coatings on Mild Steel, Trans. A.S.M., 38, 909 (1947).

6) Travers, A., Coating of Iron with Titanium, Chemie et Industrie, special number March 1932, p. 345.

7) Kowal, S., Impregnation of Steel with Titanium etc., H. Brutcher Translation No. 3152 (1953) from Prace Instytutow Mechaniki (Warsaw) No. 6, 5 (1953).

8) Gill, C. B., Straumanis, M. E., and Schlechten, A. W., Corrosion of Titanium in Fused Chlorides and the Formation of Pyrosols, Electrochem. Soc. Paper, May (1954).

9) Lorenz, R. and Eitel, W., "Pyrosole", Akademische Verlagsges., Leipzig, (1926). See also R. Lorenz "Pyrosols" in J. Alexander's "Colloid Chemistry", Vol. I, pp. 681-706, Reinhold Publ. Corp., New York (1926).

10) Moss, M. L. and Mellon, M. G., Colorimetric Determination of Iron, etc., Ind. and Eng. Chem. (Analyt. Ed.) 14, 862 (1942).

11) Samuel, R. L. and Lockington, N. A., The Protection of Metallic Surfaces by Chromium Diffusion, Metal Treatment, 18, 354 (1951).

12) Schlechten, A. W., Straumanis, M. E. and Gill, C. B., Electrodeposition of Titanium, WADC Technical Report, No. 53-162, Pt. 1 (1953).

Approved for Public Release

Contrails

13) Bumps, E. S., Kesseler, H. D. and Hansen, M., Phase Diagrams of the Ti-Al, Ti-Cr, Fe, and Ti-O Alloy Systems, Trans. A.S.M., 45, 1008 (1953).

14) Copson, H. R., Corrosion of Heating Electrodes in Molten Chloride Baths, J. Electrochem. Soc., 100, 257 (1953).

15) Heymann, E., Solutions of Metals in Molten Salts, Austral. Chem. Ind. Journ. and Proc. 4, 38 (1937).

16) Farquharson, J. and Heymann, E., Magnetic Properties of Solutions of Cadmium in Molten Cadmium Chloride and of Molten Calomel, Trans. Farad. Soc., 31, 1004 (1935).

17) Cubicciotti, D., Solutions of Metals in Fused Salts, J. of Metals, 5, 1106 (1953).

18) Straumanis, M. E. and Fang, C. C., The Structure of Metal Deposits Obtained by Electrochemical Displacement upon Zinc, J. Electrochem. Soc., 98, 9 (1951).

19) Drossbach, P., The Deposition of Tantalum, Titanium, and Sodium as Sodium-Lead Alloys from Fused Salt Mixtures, Zeit. fur Elektrochem., 57, 548, 557, 558 (1953).

Approved for Public Release